IPC Integrated Professional Cleaning

IPC Gansow

Spare Parts List

IPC EAGLE

Ref: LPTB01223

Model: CLEANTIME 70 RIDER BT85

Table: SQUEEGEE

Progressive Number: 1

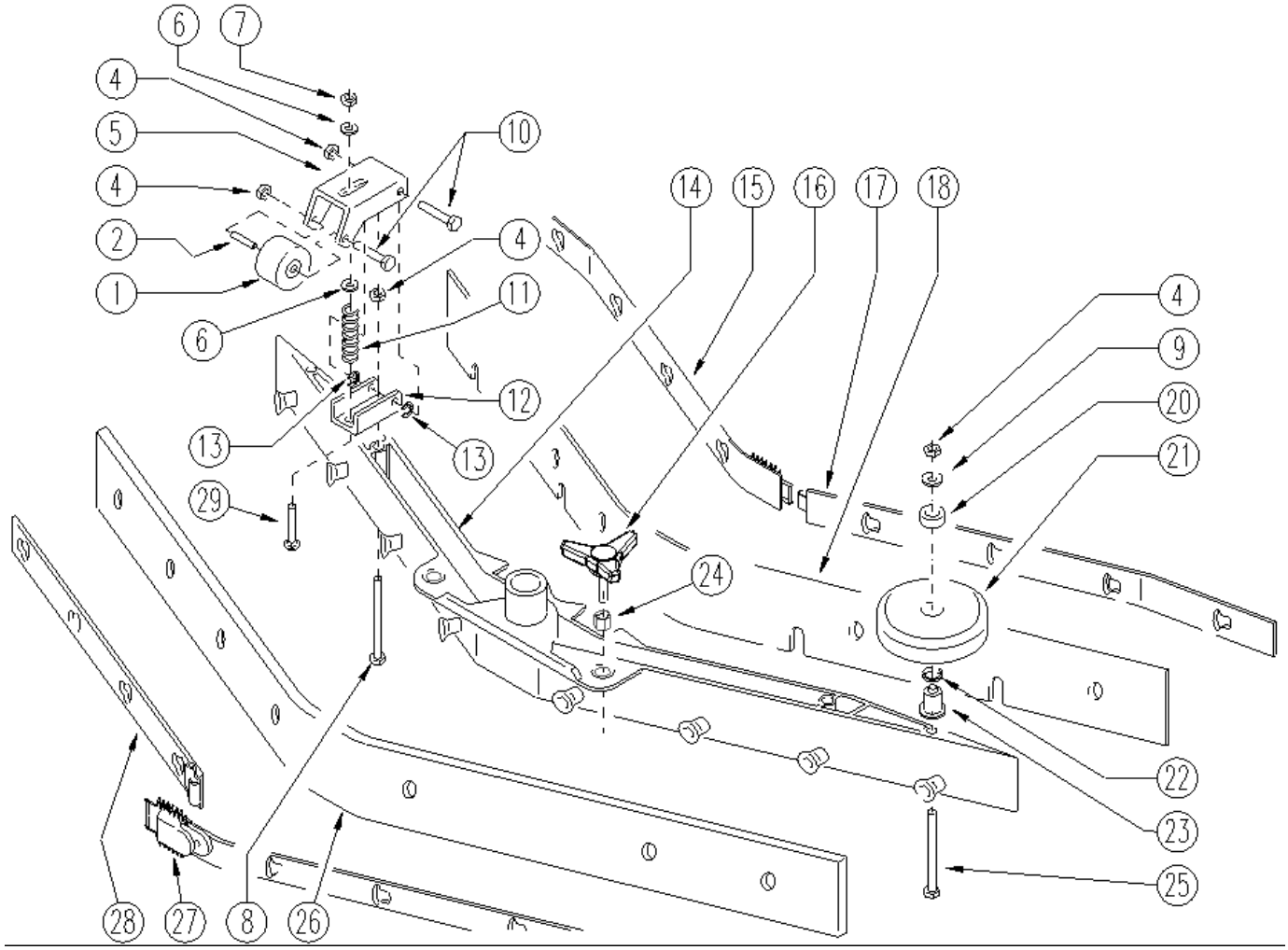

Ref.	K	Part N.	Customer Part N.	Description	Qty	Validity: From	To	Price
0001		RTRT49413		WHEEL D. 60-D.15 X36 NYL.	2,00			--
0002		LAFN04041		SPACER D6/15	2,00			--
0004		VTDD01694		NUT M 6 INX	8,00			--
0005		LAFN05559		SUPPORT RUOTINO	2,00			--
0006		VTRS13947		WASHER D. 8 INX UNI 6592	4,00			--
0007		VTDD01695		NUT M 8 INX	2,00			--
0008		VTVT15142		SCREW TE M 6x45 INOX	2,00			--
0009		VTRS00245		WASHER D.6 UNI 6592 INOX	2,00			--
0010		VTVT15515		SCREW TE M 6X 50 INOX A2	4,00			--
0011		MLML49422		SPRING D.15X 45 X1	2,00			--
0012		LAFN51069		BRACKET SUPP.RUOTINO SQUEEGEE	2,00			--
0013		VTAE45707	#8479.90.9498	CIRCLIP D. 6 UNI 7434 INOX	4,00			--
0014		MFVR00140		BODY SQUEEGEE PRESSOFUSO	1,00			--
0015		LAFN51047		LAMINATION BLOCCA LAMA ANTER.SX "L"	1,00			--
0016		MPVR05265		KNOB 8X25	2,00			--
0017		LAFN51046		LAMINATION BLOCCA LAMA ANTER.DX "L"	1,00			--
0018		MPVR48380		RUBBER BLADE LAV. 890	1,00			--
0020		MPVR49229		BUSHING SHK	2,00			--
0021		MPVR05290		ROLLER PARACOLPI	2,00			--
0022		GUGO00164		GASKET	2,00			--
0023		LAFN04100		SPACER PER RUOTINO PARACOLPI	2,00			--
0024		VTVR00022		INSERT FILETTATO ESAGONALE M8	2,00			--
0025		VTVT00841		SCREW TE M. 6-65	2,00			--
0026		MPVR48379		RUBBER BLADE LAV. 890 PARA	1,00			--
0027		LAFN05675		BLADE HOLDER POSTERIORE DX (L)	1,00			--
0028		LAFN05674		BLADE HOLDER POSTERIORE SX (L)	1,00			--
0029		VTVT01304		SCREW M 8X 40 TTQST UNI 5731	2,00			--

Table: BOARD

Progressive Number: 1

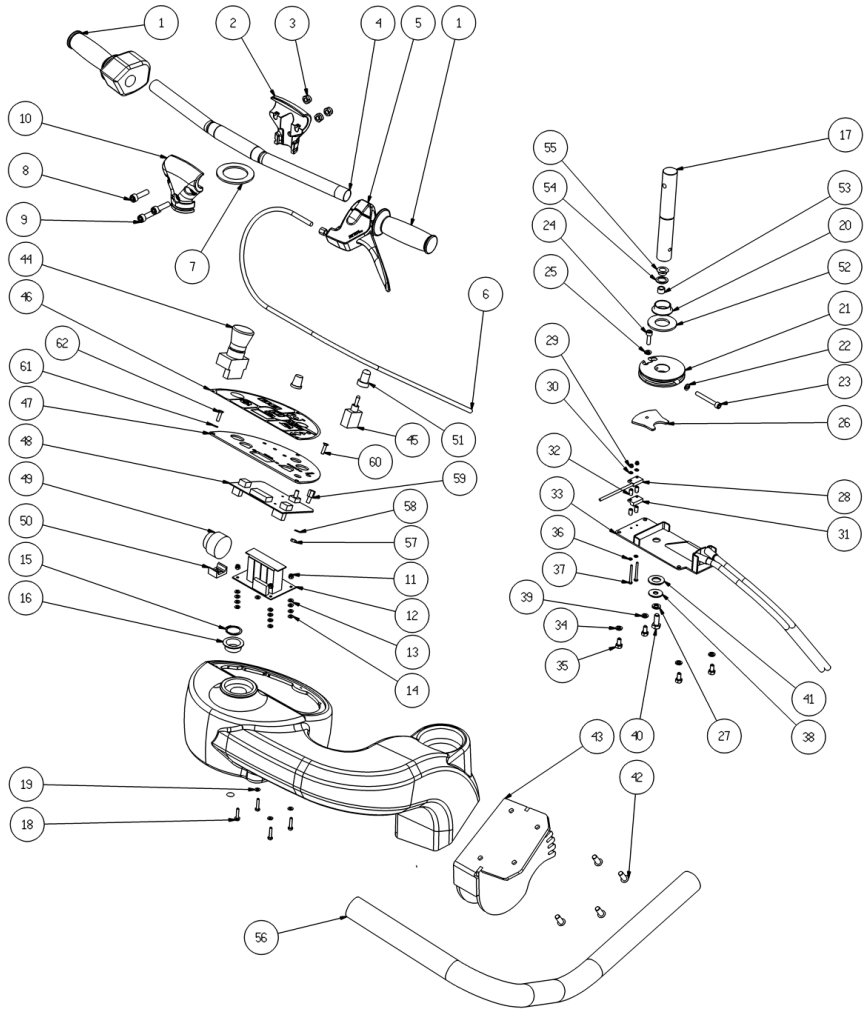

Ref.	K	Part N.	Customer Part N.	Description	Qty	Validity: From	To	Price
0001		MECE00477		ACCELERATOR 5K	1,00			--
0002		MFVR00215		SUPPORT	1,00			--
0003		VTDD01695		NUT M 8 INX	3,00			--
0004		LAFN06905		HANDLEBAR -	1,00			--
0005		CMCV40002		LEVER D.22 C/STZ. MN. C.16	1,00			--
0006		CMCV00436		CABLE FRENI	1,00			--
0007		MPVR05632		FLANGE -	1,00			--
0008		VTVT00822		SCREW TCEI M 8-30	2,00			--
0009		VTVT06241		CARRYNG BAG	1,00			--
0010		MFVR00214		SUPPORT	1,00			--
0011		VTDD15925		NUT M 4 INX	4,00			--
0012		MECE00482		BOARD CT70R	1,00			--
0013		VTRS00515		WASHER D. 4 INX	8,00			--
0014		VTRS00515		WASHER D. 4 INX	8,00			--
0015		VTAE00018		SEEGER E25x1,2 DIN471	1,00			--
0016		MPVR05408		BUSHING CB	1,00			--
0017		LAFN06906		AXLE STERZO	1,00			--
0018		VTVT00727		SCREW TE M. 4-20	4,00			--
0019		VTRS00515		WASHER D. 4 INX	4,00			--
0020		MPVR05408		BUSHING CB	1,00			--
0021		MTPL00201		PULLEY -	1,00			--
0022		VTRS15144		WASHER D. 6 INX GRW UNI 1751	1,00			--
0023		VTVT00261		SCREW TCEI M 6X50 ZC. UNI 5931	1,00			--
0024		VTVT00428		SCREW TCEI 6X20 UNI5931 INX	1,00			--
0025		VTRS15144		WASHER D. 6 INX GRW UNI 1751	1,00			--
0026		LAFN07619		PLATE -	1,00			--
0027		VTRS15146		WASHER D. 8 INX GRW UNI 1751	1,00			--
0028		MECI00560		SENSOR SMP14-C-001	1,00			--
0029		VTDD00210		NUT M 3 INOX	2,00			--
0030		VTRS21116		WASHER D. 3 INX	2,00			--
0031		MEVR01745		BLOCK	1,00			--
0032		MPVR05636		SPACER -	4,00			--
0033		LAFN06907		BOX STERZO	1,00			--
0034		VTRS15144		WASHER D. 6 INX GRW UNI 1751	4,00			--
0035		VTVT15143		SCREW TE 6X16 UNI5739	4,00			--
0036		VTRS21116		WASHER D. 3 INX	2,00			--
0037		VTVT00691		CARRYNG BAG	2,00			--
0038		VTRS13946		WASHER D. 8 X24 INX UNI 6593	1,00			--
0039		VTRS15146		WASHER D. 8 INX GRW UNI 1751	1,00			--

Table: BOARD

Progressive Number: 1

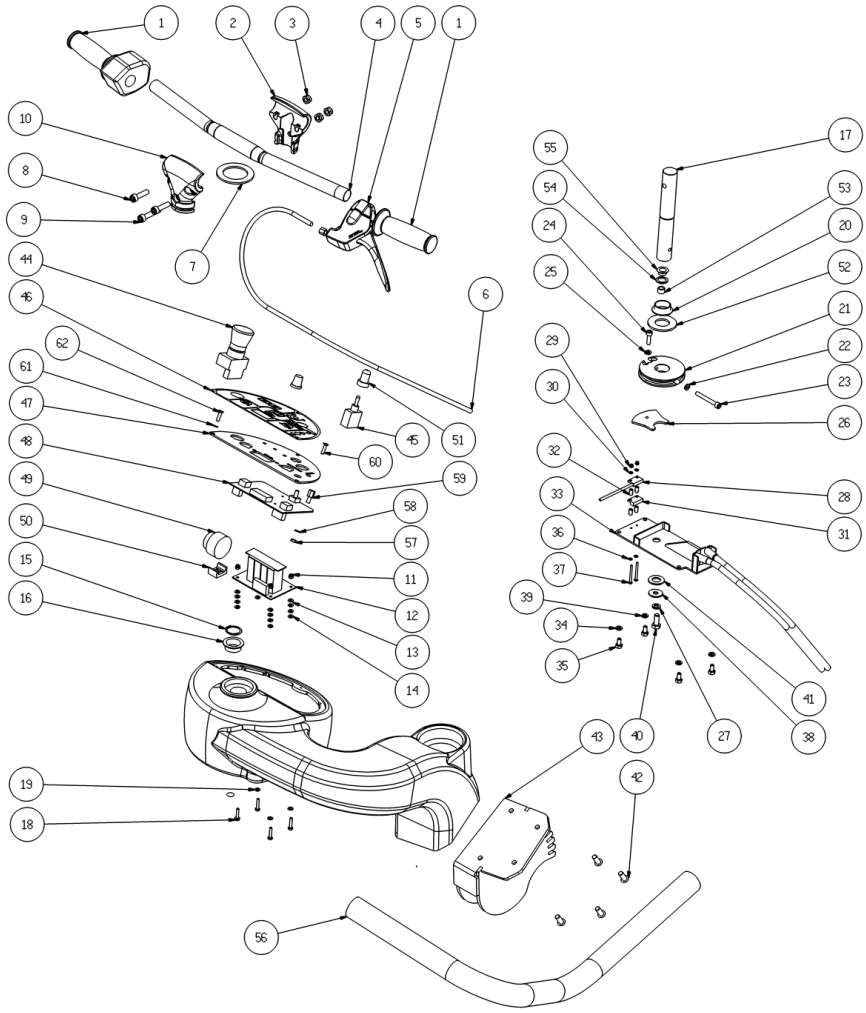

Ref.	K	Part N.	Customer Part N.	Description	Qty	Validity: From	To	Price
0040		VTVT13938		SCREW TE 8X20 UNI5739 INX	1,00			--
0041		VTRS00250		WASHER D.14	1,00			--
0042		VTVT49163		SCREW TBEI M 8X 20 ISO 7380 IX	4,00			--
0043		LAFN06909		PLATE SELETTORE	1,00			--
0044		MECI00402		BUTTON A FUNGO	1,00			--
0045		MECI30499		SWITCH 10A - 250VAC	1,00			--
0046		ETET01589		LABEL RIDER	1,00			--
0047		LAFN06901		SUPPORT PLANCIA	1,00			--
0048		MECE00480		BOARD RIDER	1,00			--
0049		MEVR01436		BUZZER -	1,00			--
0050		FSVR00243		CLAMP 20/30	1,00			--
0051		MEVR01975		RUBBER DEVIATORE	1,00			--
0052		VTRS00276		WASHER 25-50	1,00			--
0053		LAFN08823		SPACER -	1,00			--
0054		VTRS00376		WASHER 15x21	1,00			--
0055		CUVR00186		BEARING -	1,00			--
0056		MPVR05795		SHEATH -	1,00			--
0057		VTDD21115		NUT M 3 INOX	3,00			--
0058		VTRS00268		WASHER D.3	3,00			--
0059		VTVR00481		INSERT FILETTATO M6	3,00			--
0060		VTVT00865		SCREW TSP-TC M 3X 6 UNI7688 INX	3,00			--
0061		VTRS00515		WASHER D. 4 INX	3,00			--
0062		VTVT37012		SCREW M 4X 10 TCB-TC INX	3,00			--

Table: TANK

Progressive Number: 1

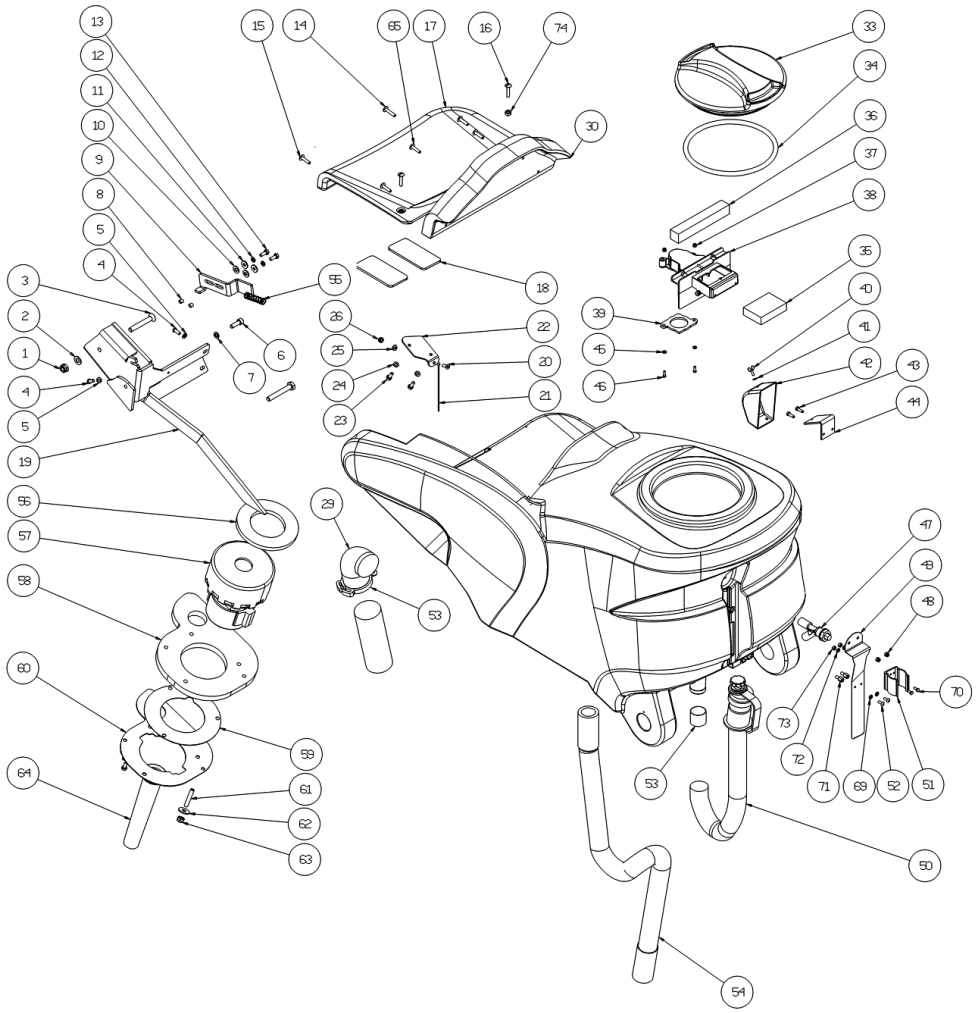

Ref.	K	Part N.	Customer Part N.	Description	Qty	Validity: From	To	Price
0001		VTDD15519		NUT M10 INOX	1,00			--
0002		VTRS15523		WASHER D.10 X21 INOX UNI 6592	1,00			--
0003		VTVT01685		SCREW TSPEI M.10X70	1,00			--
0004		VTVT00787		SCREW TBEI M 6-16	2,00			--
0005		VTRS15144		WASHER D. 6 INX GRW UNI 1751	2,00			--
0006		VTVT00639		SCREW TCEI 8X25	1,00			--
0007		VTRS15146		WASHER D. 8 INX GRW UNI 1751	1,00			--
0008		LAFN07202		SPACER -	2,00			--
0009		LAFN06908		HOOK -	1,00			--
0010		VTRS00274		WASHER NYLON 66 D.8,4-17-2 UNI	2,00			--
0011		VTRS13945		WASHER D. 6X18 INX UNI 6593	2,00			--
0012		VTRS15144		WASHER D. 6 INX GRW UNI 1751	2,00			--
0013		VTVT15143		SCREW TE 6X16 UNI5739	2,00			--
0014		VTVT01007		SCREW 6X30	3,00			--
0015		VTVT01006		SCREW 6X25	1,00			--
0016		VTVT01006		SCREW 6X25	1,00	12/2010		--
0016		VTVT01007		SCREW 6X30	1,00		11/2010	--
0017		MPVR05393		SEAT CT70 RIDER	1,00			--
0018		MEVR00148		DASHBOARD SEDILE	1,00			--
0019		LAFN06910		PLATE SERBATOIO	1,00			--
0020		VTVT00832		SCREW TSPEI M6X16 INOX	1,00			--
0021		CMCV00360		CABLE -	1,00			--
0022		LAFN07607		BRACKET -	1,00			--
0023		VTVT15143		SCREW TE 6X16 UNI5739	2,00			--
0024		VTRS15144		WASHER D. 6 INX GRW UNI 1751	2,00			--
0025		VTRS00245		WASHER D.6 UNI 6592 INOX	1,00			--
0026		VTDD01694		NUT M 6 INX	1,00			--
0029		MPVR05790		SLEEVE	1,00			--
0030		MPVR05775		SHEET METAL PA.	1,00			--
0033		MPVR04051		TANK CAP	1,00			--
0034		GUGO00263		GASKET CIRCOLARE TAPPO	1,00			--
0035		FTDP00133		FILTER	1,00			--
0036		GUGO00418		GASKET CONDOTTO ASPIRAZIONE	1,00			--
0037		VTDD15925		NUT M 4 INX	2,00			--
0038		MPVR05482		BOX -	1,00			--
0039		GUGO00417		GASKET SCATOLA ASPIRAZIONE	1,00			--
0040		VTVT01150		SCREW 4x10	1,00			--
0041		VTRS00570		WASHER -	1,00			--
0042		MPVR05596		PROTECTION -	1,00			--

Table: TANK

Progressive Number: 1

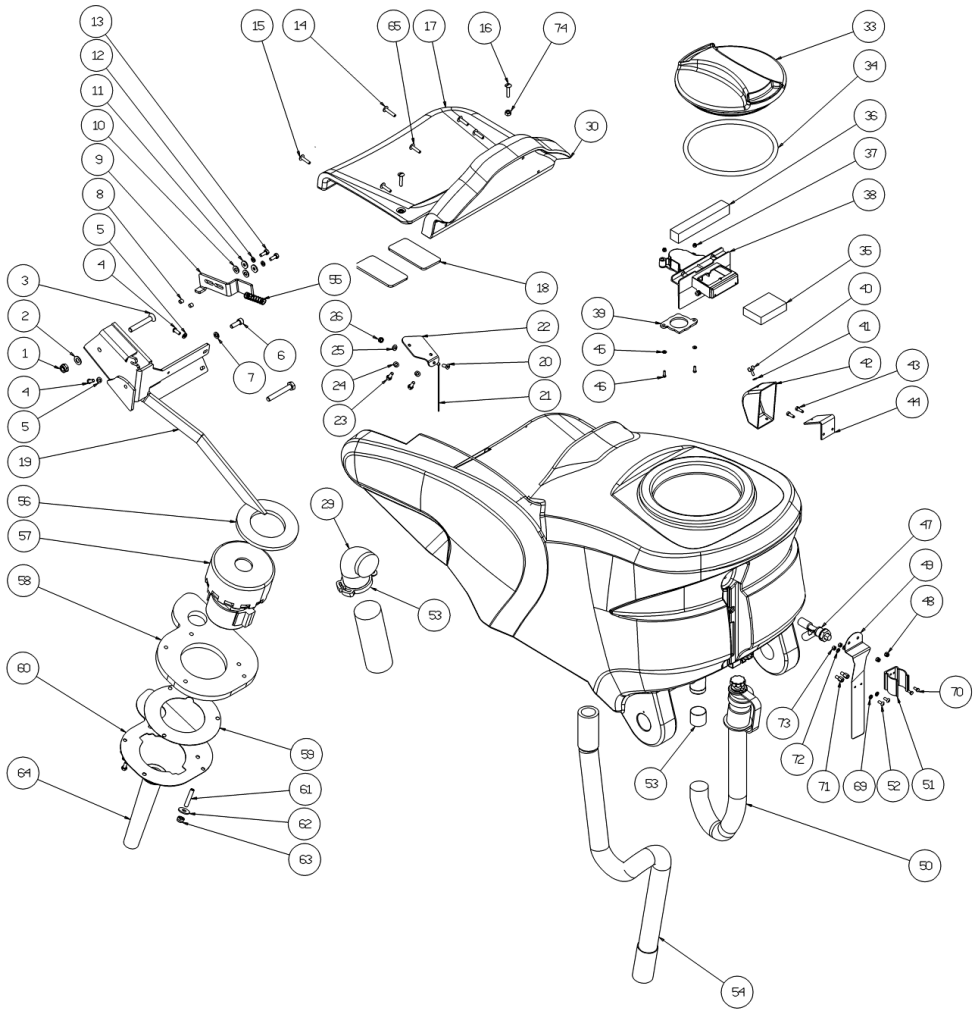

Ref.	K	Part N.	Customer Part N.	Description	Qty	Validity: From	To	Price
0043		VTVT07725		SCREW TE 5X16 UNI5739 INX	2,00			--
0044		LAFN07728		BRACKET -	1,00			--
0045		VTRS00251		WASHER 4-16 INOX A2	2,00			--
0046		VTVT00873		SCREW TE 4X35	2,00			--
0047		MECI00516		SENSOR DI LIVELLO ORIZZONTALE	1,00			--
0048		VTDD01693		NUT M 5 INX	2,00			--
0049		LAFN07624		PROTECTION -	1,00			--
0050		TBBP00456		TUBE CT40/70	1,00		02/2011	--
0050		TBFX00348		TUBE CT40-70-90	1,00	02/2011		--
0051		MPVR46988		CLIP LAV. SHK	1,00			--
0052		VTVT37012		SCREW M 4X 10 TCB-TC INX	2,00			--
0053		FSVR00254		CLAMP -	1,00			--
0054		TBFX00337		TUBE L=1100	1,00			--
0055		MLML38415		SPRING E350 II	1,00			--
0056		GUGO00272		GASKET	1,00			--
0057		MOCC00342		VACUUM CLEANER 24V	1,00			--
0058		MPVR05103		SOUND-PROOFING ASPIRATORE	1,00			--
0059		MPVR04724		FLANGE IN NYLON	1,00			--
0060		LAFN06363		FLANGE ASPIRATORE	1,00			--
0061		VTVT00900		GRUB SCREW M 6-30 CON ES	3,00			--
0062		VTRS13945		WASHER D. 6X18 INX UNI 6593	3,00			--
0063		VTDD01694		NUT M 6 INX	3,00			--
0064		MPVR05635		TUBE -	1,00			--
0065		VTVT01370		SCREW M6X35	4,00			--
0067		RCVR00545		CONNECTOR 90°	1,00			--
0068		VTVT48694		SCREW TCB TC 5 X12 UNI 9707 TZ	1,00			--
0069		VTRS15913		WASHER D. 4 GROVER A2 UNI1751	2,00			--
0070		VTVT21096		SCREW TE M 4X 10 INX	2,00			--
0071		MPVR05794		SPACER -	2,00			--
0072		VTRS00515		WASHER D. 4 INX	2,00			--
0073		VTDD00055		NUT M 4 ATB A2	2,00			--
0074		VTDD01694		NUT M 6 INX	1,00	12/2010		--

Table: WATER TANK

Progressive Number: 1

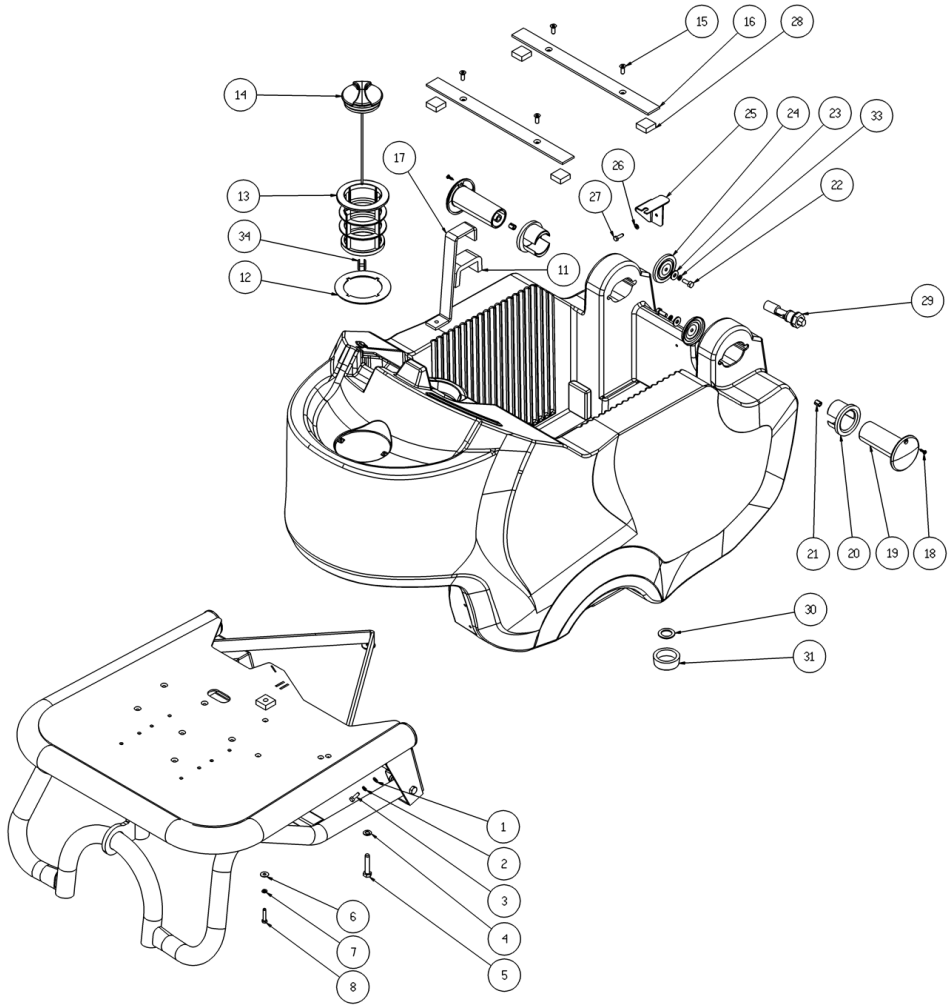

Ref.	K	Part N.	Customer Part N.	Description	Qty	Validity: From	To	Price
0001		VTRS13750		WASHER D. 5X14 INX	4,00			--
0002		VTRS15908		WASHER D. 5 INX GRW UNI 1751	4,00			--
0003		VTVT01300		SCREW TE M5X12 INOX	4,00	12/2010		--
0003		VTVT07725		SCREW TE 5X16 UNI5739 INX	4,00		11/2010	--
0004		VTRS15146		WASHER D. 8 INX GRW UNI 1751	2,00			--
0005		VTVT00708		SCREW TE M. 8-40	2,00			--
0006		VTRS13750		WASHER D. 5X14 INX	2,00			--
0007		VTRS15908		WASHER D. 5 INX GRW UNI 1751	2,00			--
0008		VTVT00766		SCREW TE M. 5-25	2,00			--
0011		MPVR05642		THICKNESS -	1,00			--
0012		GUGO00267		GASKET FILTRO	1,00			--
0013		FTAC00041		FILTER -	1,00			--
0014		MPVR05188		CAP -	1,00			--
0015		VTVT00832		SCREW TSPEI M6X16 INOX	4,00			--
0016		LAFN07604		PLATE -	2,00			--
0017		LAFN07751		BRACKET -	1,00			--
0018		VTVT48694		SCREW TCB TC 5 X12 UNI 9707 TZ	2,00			--
0019		MPVR48695		PIN SHK.BK	2,00			--
0020		PMVR02028		RUBBER GRUPPO MONTAGGIO	2,00			--
0021		VTVR48693		INSERT M6 D.9	2,00			--
0022		VTVT15143		SCREW TE 6X16 UNI5739	2,00			--
0023		VTRS13945		WASHER D. 6X18 INX UNI 6593	2,00			--
0024		LAFN07800		SHEET METAL PA.-	2,00			--
0025		LAFN06925		BRACKET -	1,00			--
0026		VTRS15908		WASHER D. 5 INX GRW UNI 1751	1,00			--
0027		VTVT01300		SCREW TE M5X12 INOX	1,00			--
0028		MPVR05743		THICKNESS -	4,00			--
0029		MECI00516		SENSOR DI LIVELLO ORIZZONTALE	1,00			--
0030		GUGO00416		GASKET TAPPO SCARICO SERB.	1,00			--
0031		MPVR04931		CAP SCARICO	1,00			--
0032		MPVR02944		CAP DOPPIO DI FISSAGGIO	1,00			--
0033		VTRS15144		WASHER D. 6 INX GRW UNI 1751	2,00			--
0034		MPVR02944		CAP DOPPIO DI FISSAGGIO	1,00			--

Table: FRAME

Progressive Number: 1

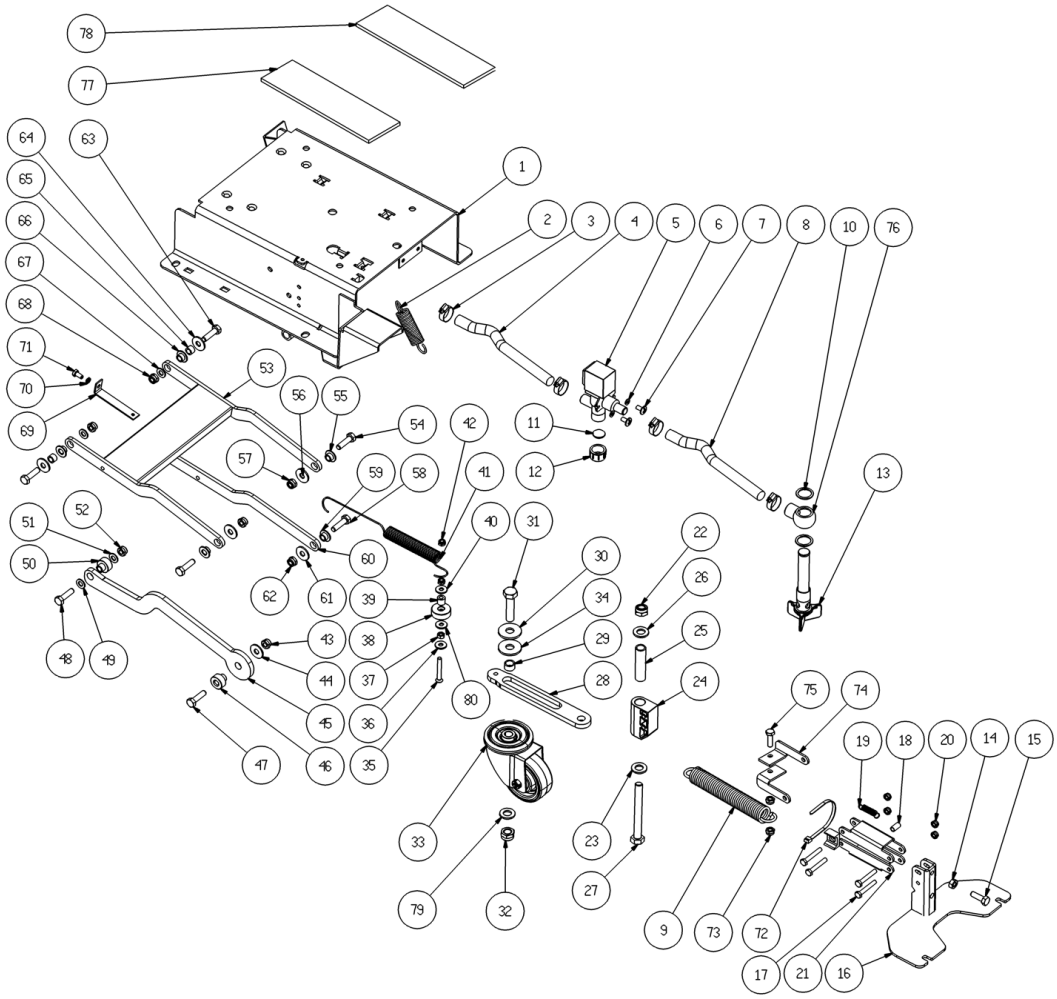

Ref.	K	Part N.	Customer Part N.	Description	Qty	Validity: From	To	Price
0001		LAFN06923		BASE -	1,00			--
0002		MLML00325		SPRING -	1,00			--
0003		FSVR00428		CLAMP D. 12-20	4,00			--
0005		MEEV00018		SOLENOID VALVE	1,00			--
0006		VTRS00516		WASHER D. 5 INX	2,00			--
0007		VTVT48694		SCREW TCB TC 5 X12 UNI 9707 TZ	2,00			--
0009		MLML31105		SPRING D. 17.5 X105 N36	1,00			--
0010		VTRS00567		WASHER 1/2	2,00			--
0011		GUGO00268		GASKET D.21 SP.3 GOMMA	1,00			--
0012		RCVR00353		CAP 1/2"G X ELETTROV. ACL	1,00			--
0013		MPVR05221		FILTER COMPLETO	1,00			--
0014		VTDD15521		NUT M 8 INX A2 UNI 5588	1,00			--
0015		VTVT13937		SCREW TE M 8X 30 INX UNI 5739	1,00			--
0016		LAFN07560		PLATE -	1,00			--
0017		VTVT15145		SCREW TE 6X40 UNI5739 INX	4,00			--
0018		LAFN06898		SPACER 6-8 h15	1,00			--
0019		MLML00303		SPRING REGISTRAZIONE FLAP	1,00			--
0020		VTDD01694		NUT M 6 INX	4,00			--
0021		LAFN05853		LEVER ARM SOLLEVAMENTO TERGI	2,00			--
0022		VTDD00176		NUT M.12 INOX A2 BASSO AUTOB.	1,00			--
0023		VTRS15978		WASHER D.12X24 UNI 6592 INX	1,00			--
0024		MPVR04734		BLOCK TERGI	1,00			--
0025		LAFN04188		PIN ROTAZIONE SQUEEGEE	1,00			--
0026		VTRS15978		WASHER D.12X24 UNI 6592 INX	1,00			--
0027		VTVT01686		SCREW TE M12X90	1,00			--
0028		LAFN07767		ARM -	1,00			--
0029		LAFN07768		SPACER -	1,00			--
0030		VTRS09142		WASHER D.12 X 36	1,00			--
0031		VTVT28884		SCREW TE M 12X 50 UNI 5737 INX	1,00			--
0032		VTDD00176		NUT M.12 INOX A2 BASSO AUTOB.	1,00			--
0033		RTRT00395		WHEEL -	1,00			--
0034		MPVR05684		WASHER -	1,00			--
0035		VTVT26818		SCREW M6x45 TSPEI UNI5933	1,00			--
0036		VTRS13945		WASHER D. 6X18 INX UNI 6593	1,00			--
0037		VTDD15520		NUT M 6 A2 UNI 5588 INX	1,00			--
0038		MPVR05637		BUSHING -	1,00			--
0039		LAFN04187		SPACER PER RIDUTTORE	1,00			--
0040		VTRS13945		WASHER D. 6X18 INX UNI 6593	1,00			--
0041		MLML48789		SPRING TR RHN	1,00			--

Table: FRAME

Progressive Number: 1

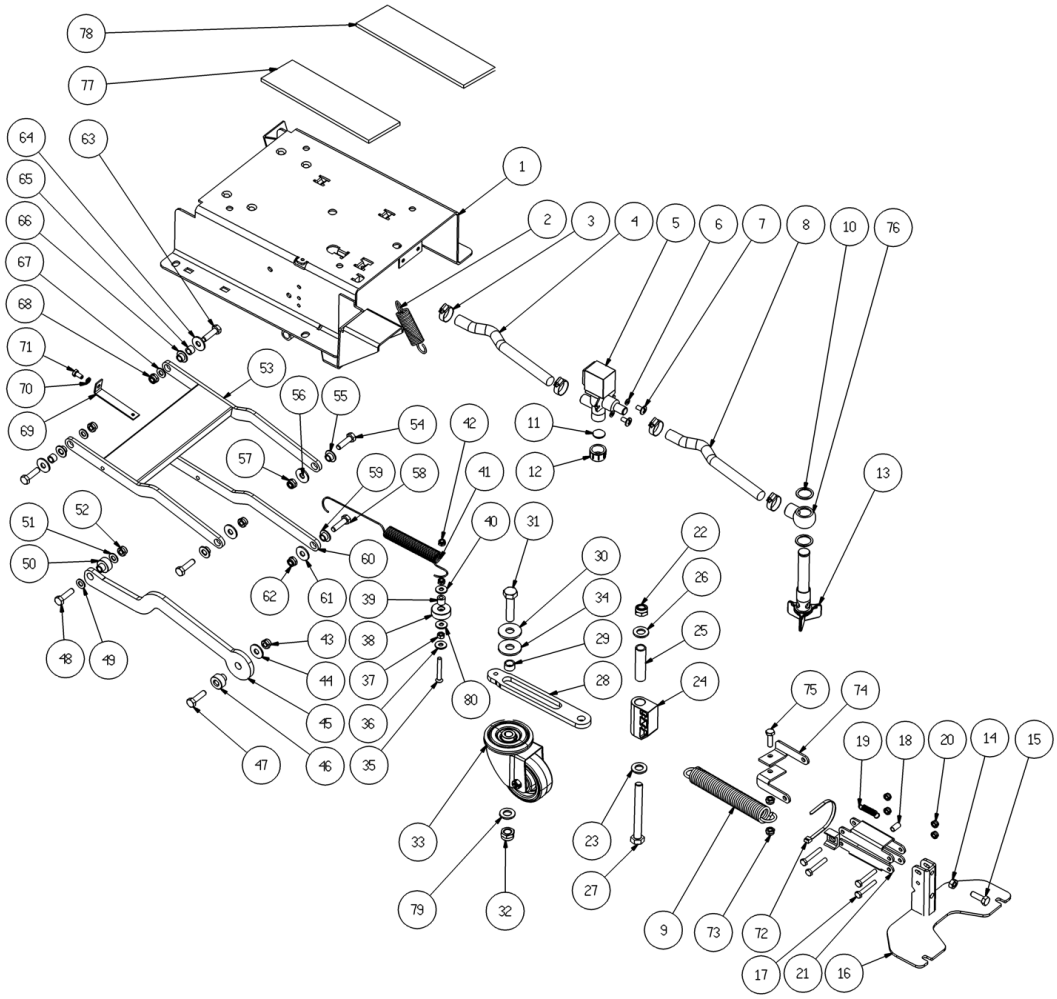

Ref.	K	Part N.	Customer Part N.	Description	Qty	Validity: From	To	Price
0042		VTDD01694		NUT M 6 INX	2,00			--
0043		VTDD01695		NUT M 8 INX	1,00			--
0044		VTRS13946		WASHER D. 8 X24 INX UNI 6593	1,00			--
0045		LAFN06924		LEVER -	1,00			--
0046		LAFN04190		BUSHING PARALLELOGR.TEST.GR.	1,00			--
0047		VTVT00410		SCREW TE M8x35 UNI5739 INOX	1,00			--
0048		VTVT00429		SCREW TE M 8X 40 INX UNI 5737	1,00			--
0049		VTRS13947		WASHER D. 8 INX UNI 6592	1,00			--
0050		LAFN04190		BUSHING PARALLELOGR.TEST.GR.	1,00			--
0051		VTRS13947		WASHER D. 8 INX UNI 6592	1,00			--
0052		VTDD01695		NUT M 8 INX	1,00			--
0053		LAFN07563		ARM -	1,00			--
0054		VTVT15907		SCREW TE 8X25 UNI5739 INX	1,00			--
0055		LAFN06391		BUSHING PARALLELOGRAMMA	1,00			--
0056		VTRS13946		WASHER D. 8 X24 INX UNI 6593	1,00			--
0057		VTDD01695		NUT M 8 INX	1,00			--
0058		VTVT15907		SCREW TE 8X25 UNI5739 INX	1,00			--
0059		LAFN06391		BUSHING PARALLELOGRAMMA	1,00			--
0060		LAFN06389		ARM PARALLELOGRAMMA	1,00			--
0061		VTRS13946		WASHER D. 8 X24 INX UNI 6593	1,00			--
0062		VTDD01695		NUT M 8 INX	1,00			--
0063		VTVT13937		SCREW TE M 8X 30 INX UNI 5739	2,00			--
0064		VTRS13946		WASHER D. 8 X24 INX UNI 6593	2,00			--
0065		RCDS34717		BUSHING D. 9X12X 8.3	2,00			--
0066		LAFN06391		BUSHING PARALLELOGRAMMA	2,00			--
0067		VTRS13947		WASHER D. 8 INX UNI 6592	2,00			--
0068		VTDD01695		NUT M 8 INX	2,00			--
0069		LAFN07766		TIE ROD -	1,00			--
0070		VTRS15144		WASHER D. 6 INX GRW UNI 1751	1,00			--
0071		VTVT15906		SCREW TE 6X 12 A2 UNI 5739	1,00			--
0072		FSVR00248		CLAMP -	1,00			--
0073		VTDD01694		NUT M 6 INX	2,00			--
0074		LAFN07781		BRACKET -	2,00			--
0075		VTVT13939		SCREW TE 6X20 UNI5739 INX	1,00			--
0076		LAFN07783		CONNECTOR -	1,00			--
0077		MPVR05744		THICKNESS -	1,00			--
0078		MPVR05745		THICKNESS -	1,00			--
0079		VTRS15978		WASHER D.12X24 UNI 6592 INX	1,00			--
0080		VTRS13945		WASHER D. 6X18 INX UNI 6593	1,00			--

Table: TRACTION MOTOR

Progressive Number: 1

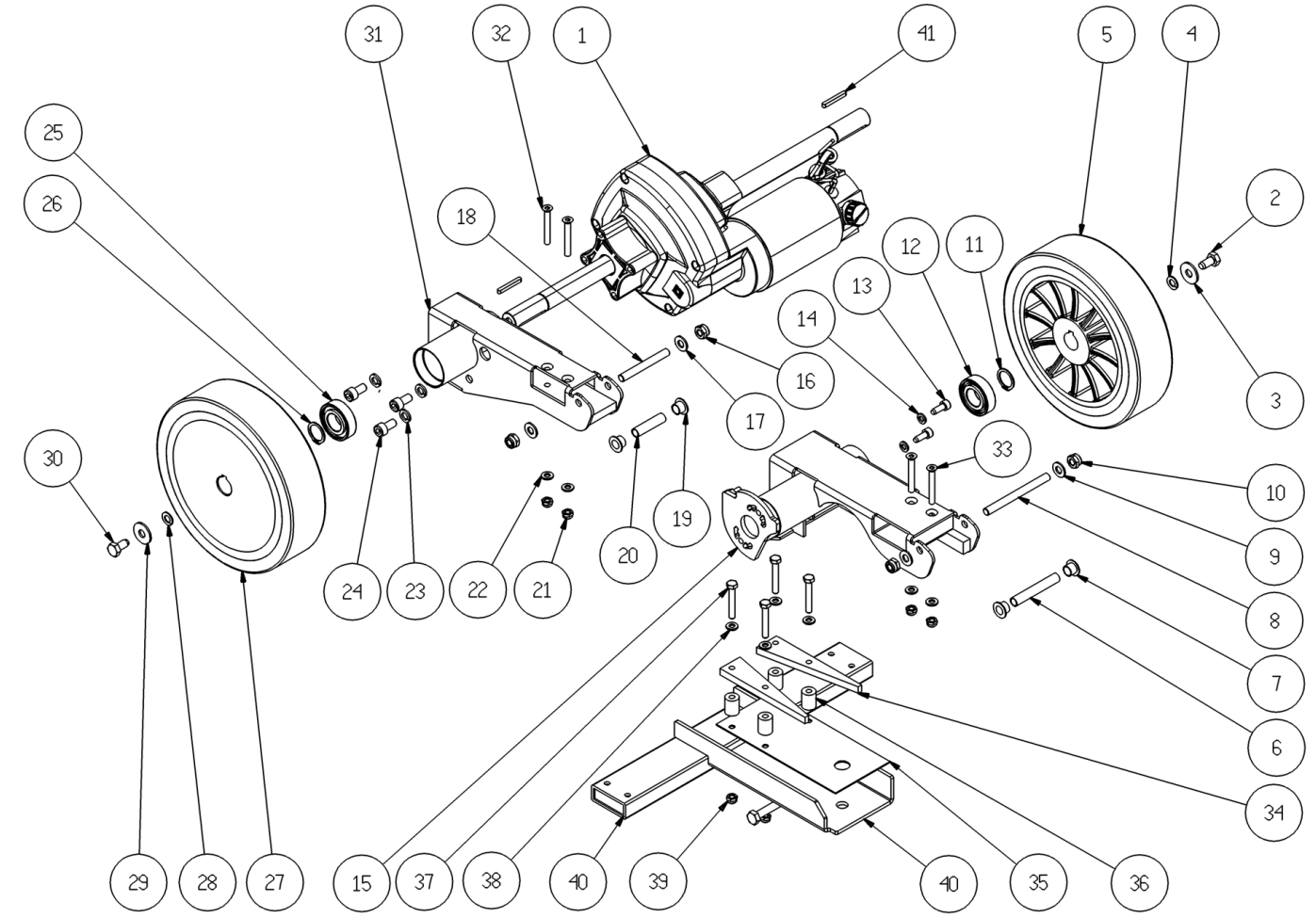

Ref.	K	Part N.	Customer Part N.	Description	Qty	Validity: From	To	Price
0001		MOCC00022		CARBON X MOT.COD.MOCC86902	2,00			--
0001		MOCC00395		MOTOR	1,00			--
0002		VTVT15916		SCREW TE M 8X 16 UNI 5739 A2	1,00			--
0003		VTRS16323		WASHER D. 8 X32 UNI 6593 INX	1,00			--
0004		VTRS15146		WASHER D. 8 INX GRW UNI 1751	1,00			--
0005		RTRT00524		WHEEL -	1,00		05/2010	--
0005		RTRT00529		WHEEL D200	2,00	05/2010		--
0006		LAFN07565		SPACER -	1,00			--
0007		CUVR43254		BUSHING CB 85 1010 18T	2,00			--
0008		LAFN07741		PIN -	1,00			--
0009		VTRS13947		WASHER D. 8 INX UNI 6592	2,00			--
0010		VTDD01695		NUT M 8 INX	2,00			--
0011		VTAE06193		CIRCLIP D. 20 UNI 7435	1,00			--
0012		CUVR19846		BALL BEARING 6004 2RS1	1,00			--
0013		VTVT00717		SCREW TCEI M. 6-16	2,00			--
0014		VTRS15144		WASHER D. 6 INX GRW UNI 1751	2,00			--
0015		LAFN06903		SUPPORT DX	1,00			--
0016		VTDD01695		NUT M 8 INX	2,00			--
0017		VTRS13947		WASHER D. 8 INX UNI 6592	2,00			--
0018		LAFN07742		PIN -	1,00			--
0019		CUVR43254		BUSHING CB 85 1010 18T	2,00			--
0020		LAFN07566		SPACER -	1,00			--
0021		VTDD01694		NUT M 6 INX	4,00			--
0022		VTRS00245		WASHER D.6 UNI 6592 INOX	4,00			--
0023		VTRS15146		WASHER D. 8 INX GRW UNI 1751	3,00			--
0024		VTVT00876		SCREW TCEI M.8-16	3,00			--
0025		CUVR19846		BALL BEARING 6004 2RS1	1,00			--
0026		VTAE06193		CIRCLIP D. 20 UNI 7435	1,00			--
0027		RTRT00524		WHEEL -	1,00			--
0028		VTRS15146		WASHER D. 8 INX GRW UNI 1751	1,00			--
0029		VTRS16323		WASHER D. 8 X32 UNI 6593 INX	1,00			--
0030		VTVT15916		SCREW TE M 8X 16 UNI 5739 A2	1,00			--
0031		LAFN06904		SUPPORT SX	1,00			--
0032		VTVT26818		SCREW M6x45 TSPEI UNI5933	2,00			--
0033		VTVT29523		SCREW M 6X 35 TSPEI UNI 5933	2,00			--
0034		MPVR05682		GUIDE -	2,00			--
0035		MPVR05683		PLATE -	1,00			--
0036		MPVR05687		SPACER -	4,00			--
0037		VTVT01683		SCREW TE 6X40	4,00			--

Table: TRACTION MOTOR

Progressive Number: 1

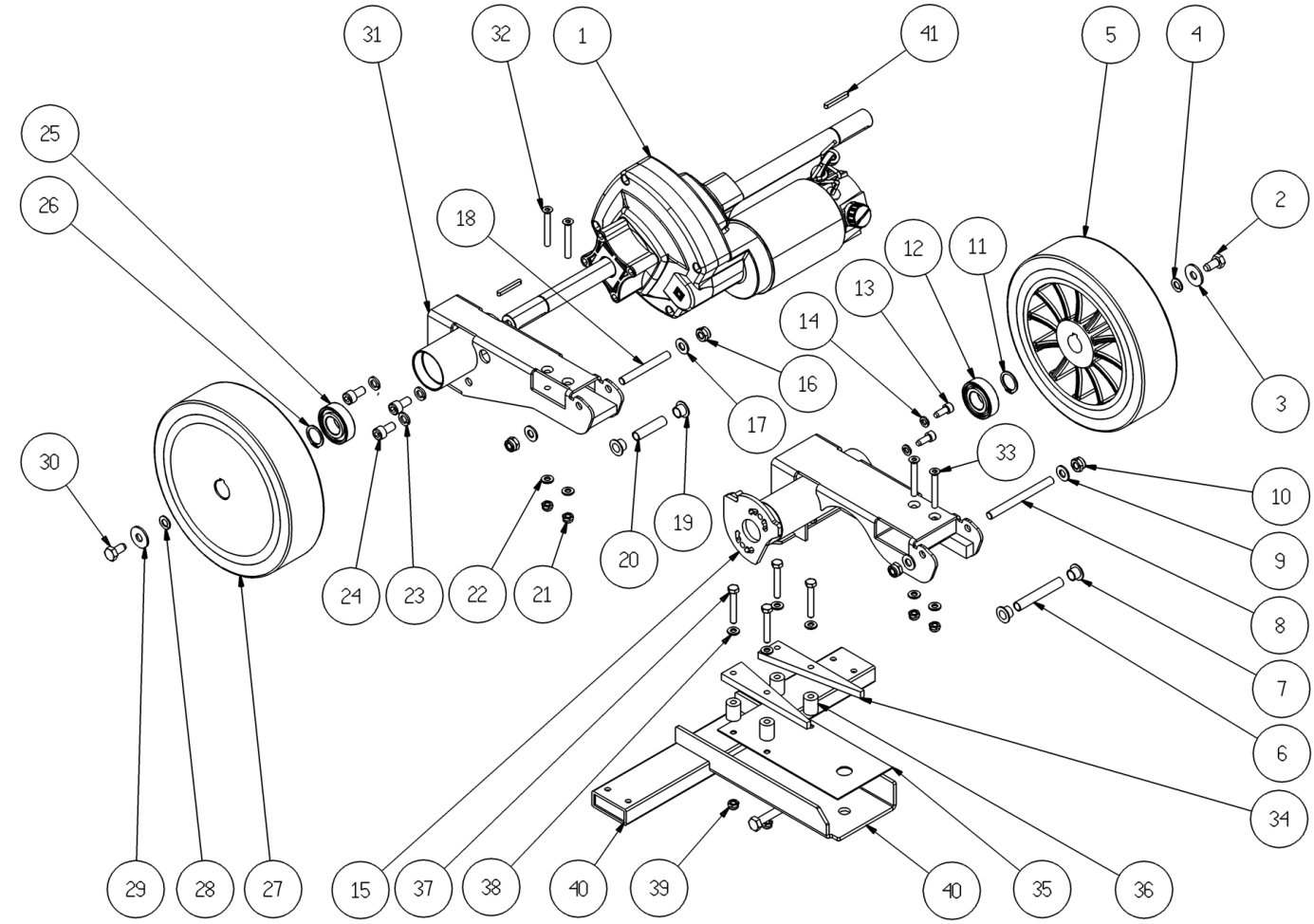

Ref.	K	Part N.	Customer Part N.	Description	Qty	Validity: From	To	Price
0038		VTRS00245		WASHER D.6 UNI 6592 INOX	4,00			--
0039		VTDD01694		NUT M 6 INX	4,00			--
0040		LAFN07456		SUPPORT -	1,00			--
0041		VTVR33668		KEY 6x 6x40 UNI 6604A	2,00			--

Table: ATUATOR

Progressive Number: 1

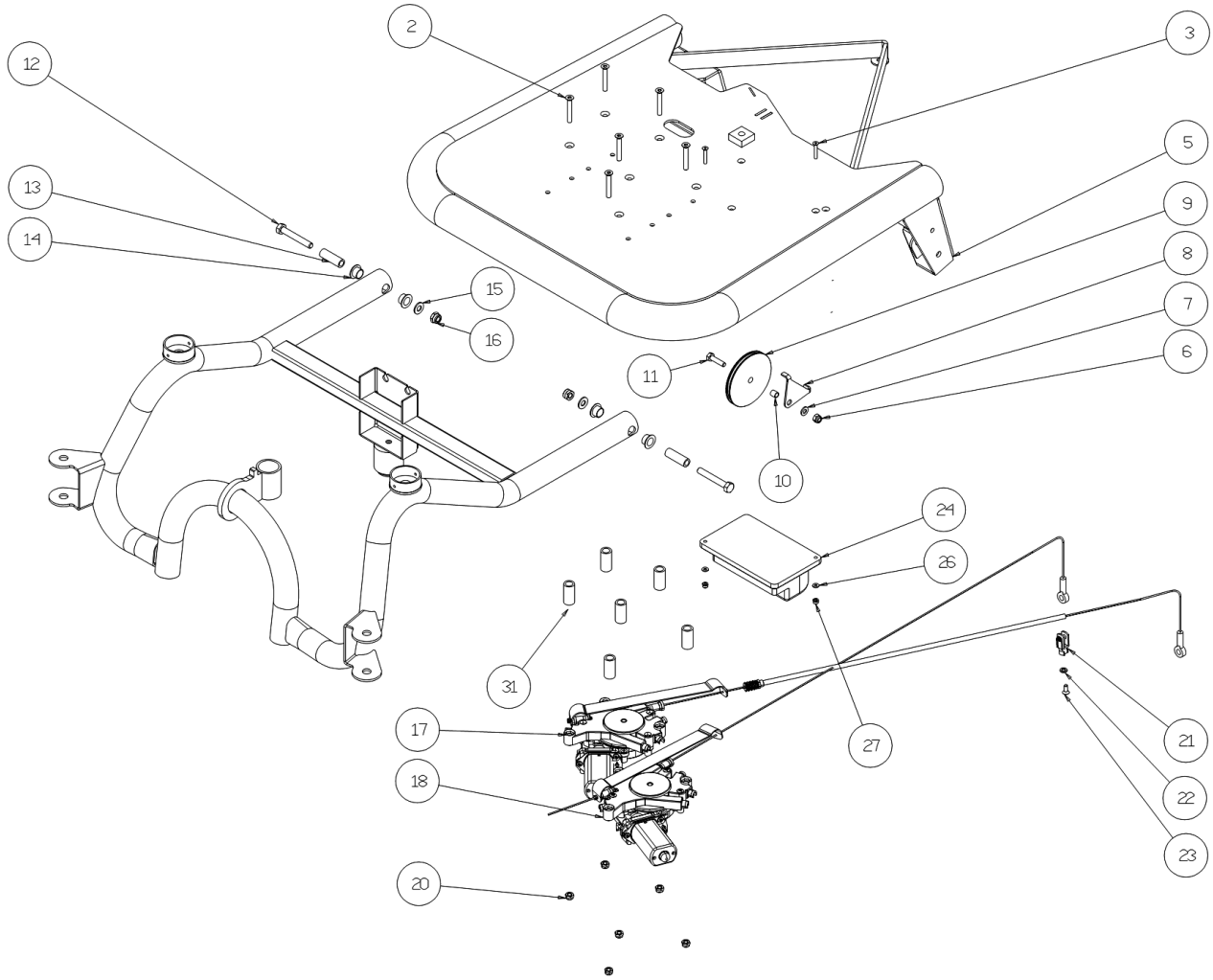

Ref.	K	Part N.	Customer Part N.	Description	Qty	Validity: From	To	Price
0002		VTVT00241		SCREW TSPEI M6X40 UNI5933	6,00			--
0003		VTVT00861		SCREW TSPEI 4X25	2,00			--
0004		MPVR05409		CAP GPN	2,00			--
0005		LAFN06911		PLANE -	1,00			--
0006		VTDD01694		NUT M 6 INX	1,00			--
0007		VTRS00245		WASHER D.6 UNI 6592 INOX	1,00			--
0008		LAFN07572		SHEET METAL PA.-	1,00			--
0009		MTPL00200		PULLEY 1450	1,00			--
0010		LAFN07571		SPACER -	1,00			--
0011		VTVT15141		SCREW TE M 6X 25 UNI 5739 INX	1,00			--
0012		VTVT00728		SCREW TE M. 8-55	2,00			--
0013		LAFN06926		PIN -	2,00			--
0014		CUVR00130		BEARING STRISCIAMENTO	4,00			--
0015		VTRS13947		WASHER D. 8 INX UNI 6592	2,00			--
0016		VTDD01695		NUT M 8 INX	2,00			--
0017		MOCC00365		ATUATOR -	1,00			--
0018		MOCC00364		ATUATOR -	1,00			--
0019		VTRS00245		WASHER D.6 UNI 6592 INOX	6,00			--
0020		VTDD01694		NUT M 6 INX	6,00			--
0021		CMCV00001		FORK UNI 1676 M8X16	1,00			--
0021		CMCV75718		CLIP UNI 1676 M8	1,00			--
0022		VTRS15146		WASHER D. 8 INX GRW UNI 1751	1,00			--
0023		VTVT13938		SCREW TE 8X20 UNI5739 INX	1,00			--
0024		MECE00496		BOARD CT70 RIDER	1,00			--
0025		VTDD00147		NUT M 4 INX U.5588	4,00			--
0026		VTRS00515		WASHER D. 4 INX	2,00			--
0027		VTDD00055		NUT M 4 ATB A2	2,00			--
0028		VTRS00245		WASHER D.6 UNI 6592 INOX	6,00			--
0029		VTDD00053		NUT M6 INOX UNI5589	12,00			--
0030		VTRS00245		WASHER D.6 UNI 6592 INOX	6,00			--
0031		LAFN03758		CARRYNG BAG	6,00			--

Table: FORE WHEEL

Progressive Number: 1

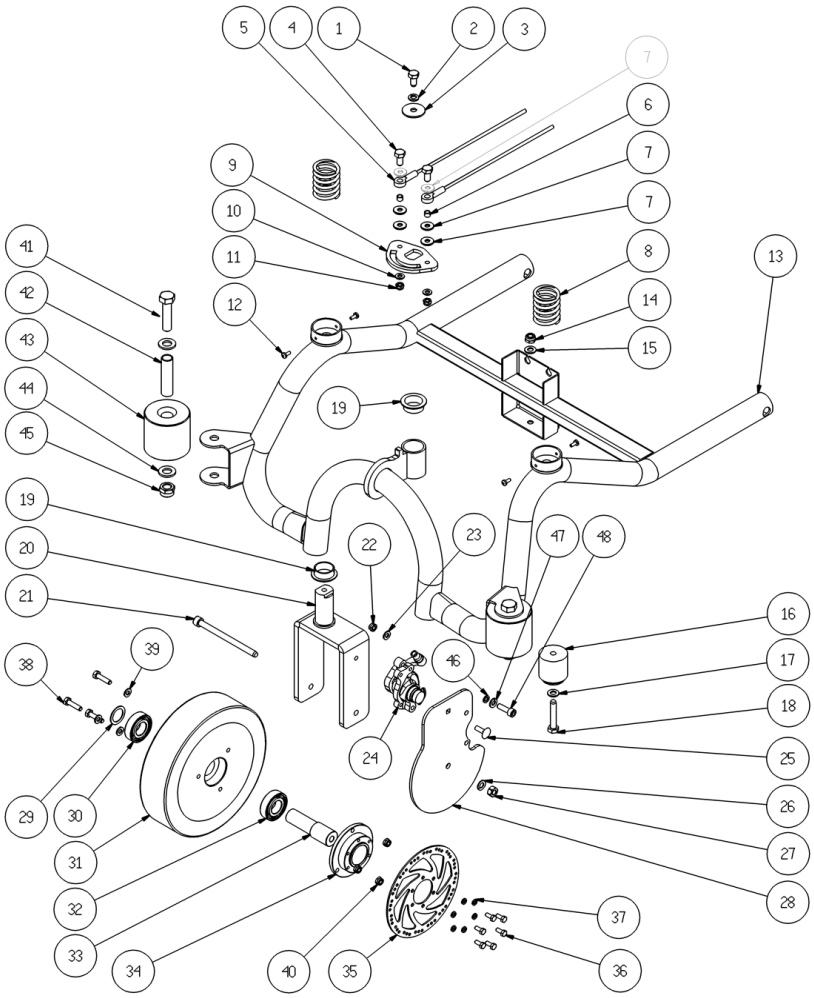

Ref.	K	Part N.	Customer Part N.	Description	Qty	Validity: From	To	Price
0001		VTVT15916		SCREW TE M 8X 16 UNI 5739 A2	1,00			--
0002		VTRS15146		WASHER D. 8 INX GRW UNI 1751	1,00			--
0003		VTRS16323		WASHER D. 8 X32 UNI 6593 INX	1,00			--
0004		VTVT15141		SCREW TE M 6X 25 UNI 5739 INX	2,00			--
0005		CMCV00435		CABLE STERZO	2,00			--
0006		LAFN07876		SPACER -	2,00			--
0007		VTRS00245		WASHER D.6 UNI 6592 INOX	6,00			--
0008		MLML00324		SPRING -	2,00			--
0009		LAFN06912		PLATE -	1,00			--
0010		VTRS00245		WASHER D.6 UNI 6592 INOX	2,00			--
0011		VTDD01694		NUT M 6 INX	2,00			--
0012		VTVT01004		SCREW TC+ M4 X 10 TRILOBATA	4,00			--
0013		LAFN06915		TUBE -	1,00			--
0014		VTDD01695		NUT M 8 INX	1,00			--
0015		VTRS13947		WASHER D. 8 INX UNI 6592	1,00			--
0016		ABGO00017		PLUG D.40x50	1,00			--
0017		VTRS13947		WASHER D. 8 INX UNI 6592	1,00			--
0018		VTVT15917		SCREW TE M 8X50 INOX A2 UNI	1,00			--
0019		MPVR05408		BUSHING CB	2,00			--
0020		LAFN06913		BRACKET -	1,00			--
0021		VTVT67560		SCREW TCEI M8X110 INOX AISI 304	1,00			--
0022		VTDD01694		NUT M 6 INX	1,00			--
0023		VTRS00245		WASHER D.6 UNI 6592 INOX	1,00			--
0024		LAFN07569		BRAKE -	1,00			--
0025		VTVT00745		SCREW TTQST M 6X 20 UNI5732 IX	1,00			--
0026		VTRS15146		WASHER D. 8 INX GRW UNI 1751	1,00			--
0027		VTDD15521		NUT M 8 INX A2 UNI 5588	1,00			--
0028		LAFN07567		PLATE -	1,00			--
0029		VTRS00032		THICKNESS 20,2X28X1 DIN 988	1,00			--
0030		CUVR19846		BALL BEARING 6004 2RS1	1,00			--
0031		RTRT00530		WHEEL D200	1,00			--
0032		CUVR19846		BALL BEARING 6004 2RS1	1,00			--
0033		LAFN06914		PIN -	1,00			--
0034		LAFN07570		SPACER -	1,00			--
0035		LAFN07569		BRAKE -	1,00			--
0036		VTVT01300		SCREW TE M5X12 INOX	6,00			--
0037		VTRS15908		WASHER D. 5 INX GRW UNI 1751	6,00			--
0038		VTVT00714		CARRYNG BAG	3,00			--
0039		VTRS00245		WASHER D.6 UNI 6592 INOX	3,00			--

Table: FORE WHEEL

Progressive Number: 1

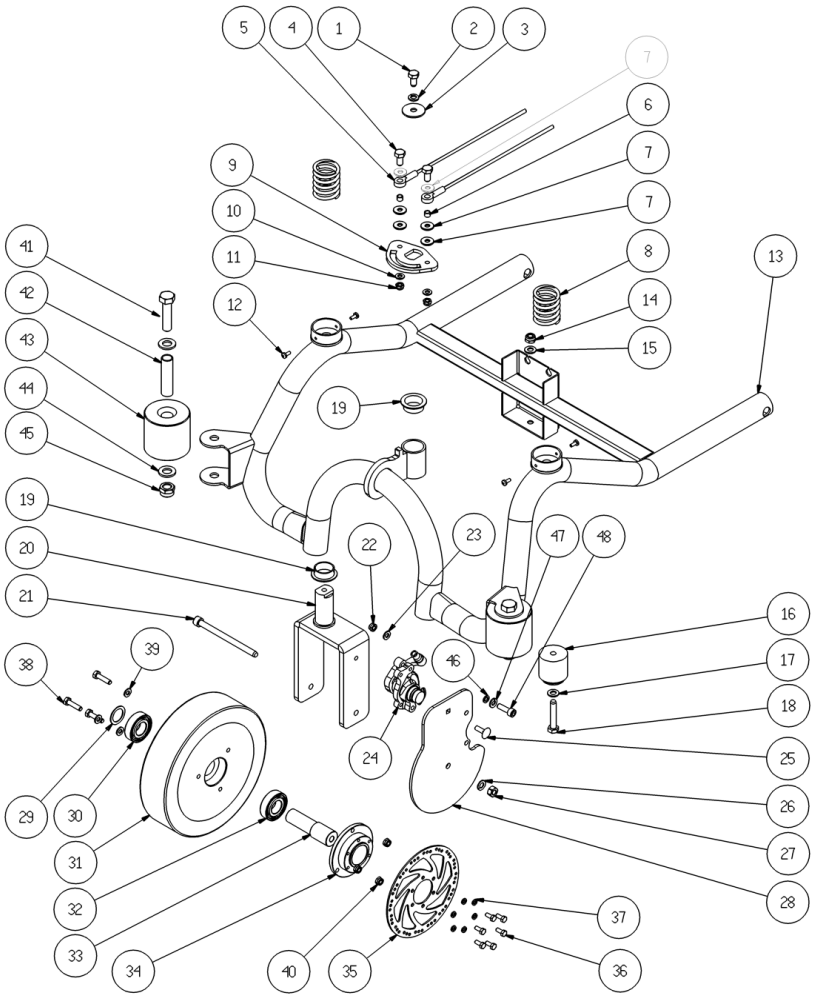

Ref.	K	Part N.	Customer Part N.	Description	Qty	Validity: From	To	Price
0040		VTDD01694		NUT M 6 INX	3,00			--
0041		VTVT01686		SCREW TE M12X90	2,00			--
0042		LAFN08803		SPACER -	2,00			--
0043		MPVR05607		ROLLER -	2,00			--
0044		VTRS15978		WASHER D.12X24 UNI 6592 INX	4,00			--
0045		VTDD00176		NUT M.12 INOX A2 BASSO AUTOB.	2,00			--
0046		VTRS00245		WASHER D.6 UNI 6592 INOX	2,00			--
0047		VTRS15144		WASHER D. 6 INX GRW UNI 1751	2,00			--
0048		VTVT00717		SCREW TCEI M. 6-16	2,00			--

Table: HEAD

Progressive Number: 1

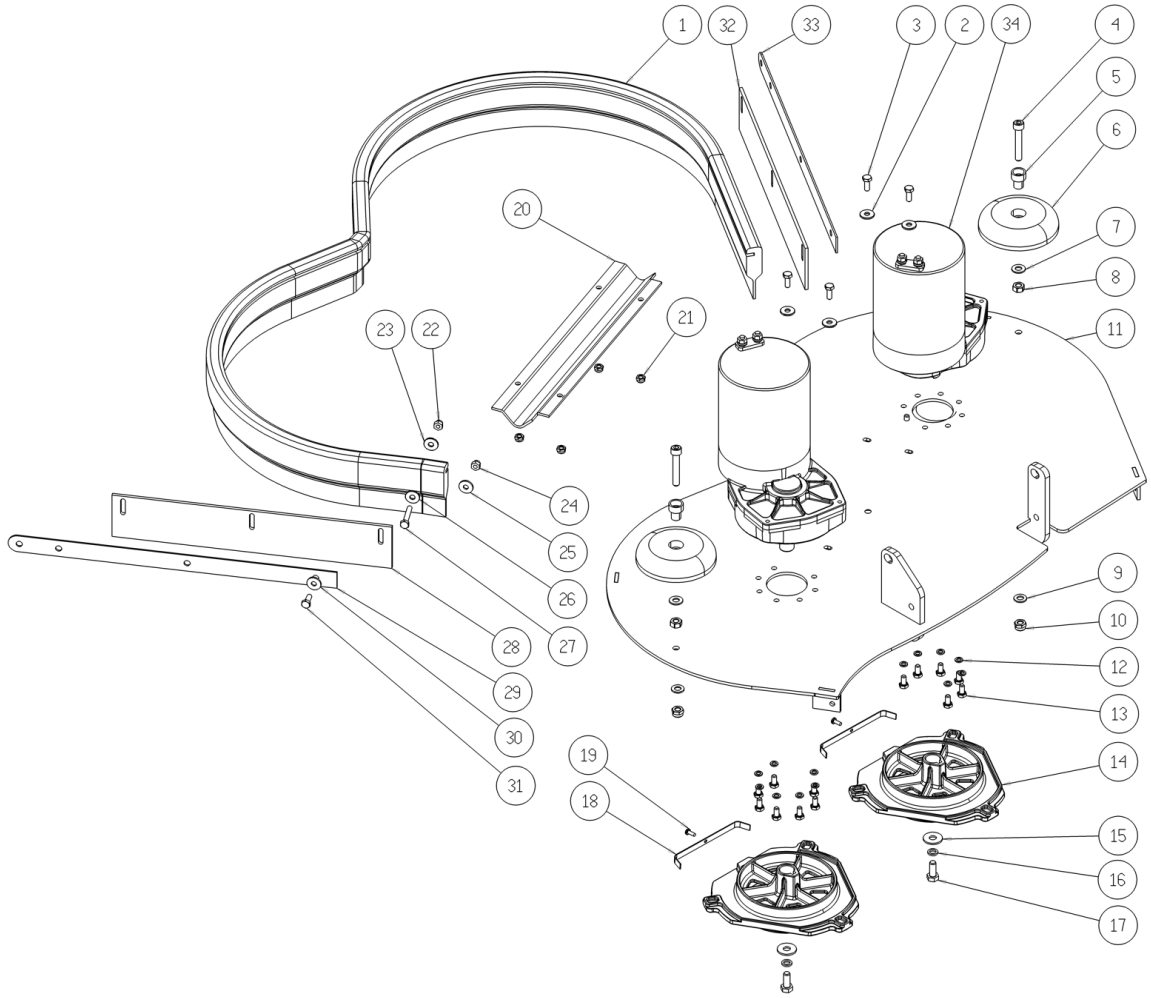

Ref.	K	Part N.	Customer Part N.	Description	Qty	Validity: From	To	Price
0001		MPVR05577		BUMPER -	1,00			--
0002		VTRS13945		WASHER D. 6X18 INX UNI 6593	4,00			--
0003		VTVT15143		SCREW TE 6X16 UNI5739	4,00			--
0004		VTVT00775		SCREW TCEI M 8X40 ZC.BK UNI5931	2,00			--
0005		LAFN03915		BUSHING NUOVO RUOTINO STRONG	2,00			--
0006		MPVR05290		ROLLER PARACOLPI	2,00			--
0007		VTRS13947		WASHER D. 8 INX UNI 6592	2,00			--
0008		VTDD15521		NUT M 8 INX A2 UNI 5588	2,00			--
0009		VTRS13947		WASHER D. 8 INX UNI 6592	2,00			--
0010		VTDD01695		NUT M 8 INX	2,00			--
0011		LAFN07590		PLATE -	1,00			--
0012		VTRS15144		WASHER D. 6 INX GRW UNI 1751	14,00			--
0013		VTVT15906		SCREW TE 6X 12 A2 UNI 5739	14,00			--
0014		MFVR00212		DRIVE DISK	2,00			--
0015		VTRS13946		WASHER D. 8 X24 INX UNI 6593	2,00			--
0016		VTRS15146		WASHER D. 8 INX GRW UNI 1751	2,00			--
0017		VTVT13938		SCREW TE 8X20 UNI5739 INX	2,00			--
0018		MLML00231		SPRING ANTISGANCIO 85 X FLANGIA	2,00			--
0019		VTVT21887		SCREW TCB-TC 4X10 8112	2,00			--
0020		LAFN07237		DISTRIBUTOR 85	1,00			--
0021		VTDD01694		NUT M 6 INX	4,00			--
0022		VTDD01694		NUT M 6 INX	7,00			--
0023		VTRS13945		WASHER D. 6X18 INX UNI 6593	7,00			--
0024		VTDD00175		NUT M.6 TONDO FILET.4 PUNTE	8,00			--
0025		MPVR35582		RUBBER LAV.	8,00			--
0026		VTRS13945		WASHER D. 6X18 INX UNI 6593	8,00			--
0027		VTVT15143		SCREW TE 6X16 UNI5739	8,00			--
0028		MPVR04746		FLAP 355X63 sp.4	1,00			--
0029		MPVR05207		SHEET METAL PA.FLAP	1,00			--
0030		VTRS13945		WASHER D. 6X18 INX UNI 6593	8,00			--
0031		VTVT15143		SCREW TE 6X16 UNI5739	8,00			--
0032		MPVR05270		FLAP DX	1,00			--
0033		MPVR05269		FLAP FLAP	1,00			--
0034		MOCC00328		MOTOR -	2,00			--

Table: ELECTRI.INSTAL.

Progressive Number: 1

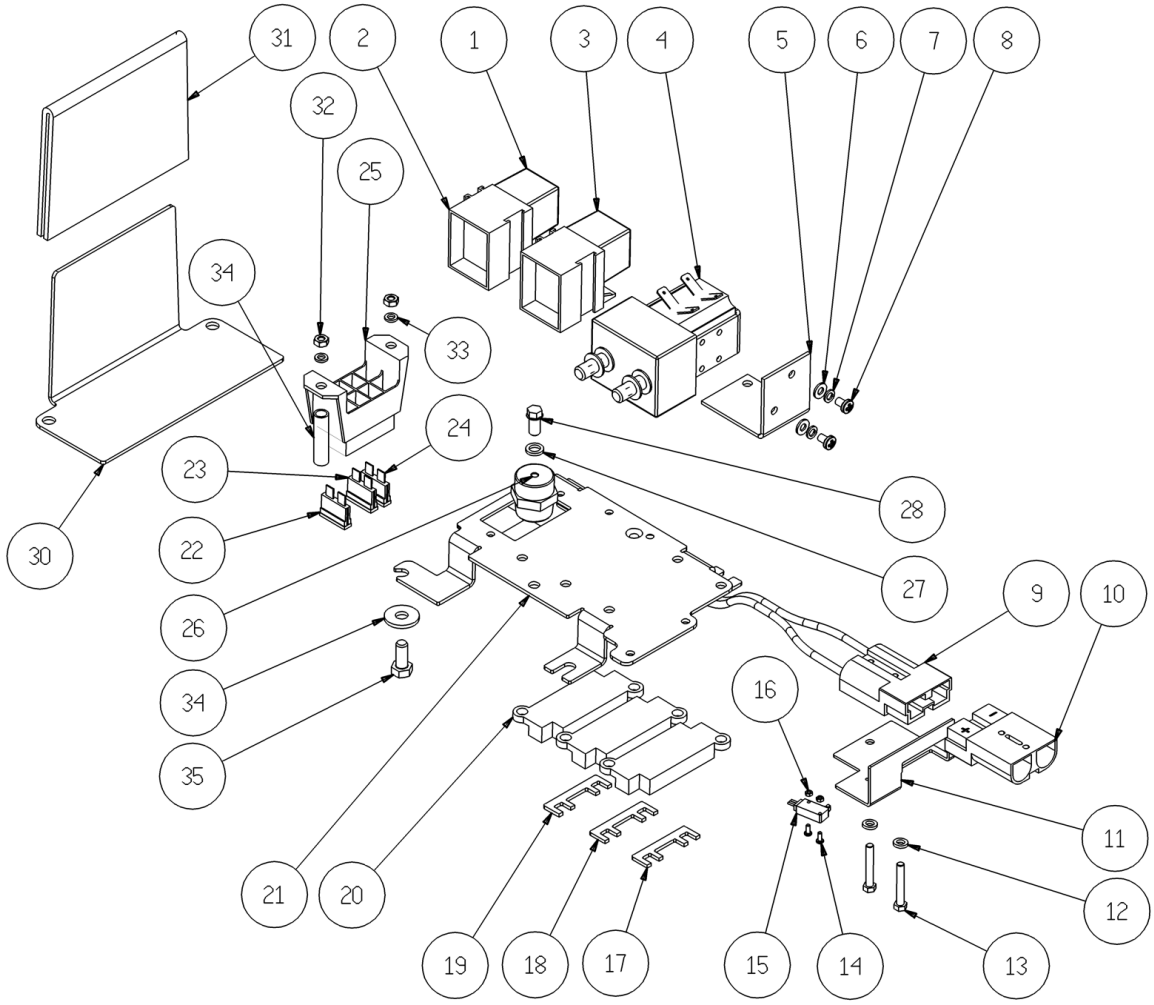

Ref.	K	Part N.	Customer Part N.	Description	Qty	Validity: From	To	Price
0001		MERL00006		SWITCH RELAY R502 024 H3M 1NO 80A	1,00			--
0002		METT00053		BLOCK PORTA RELE'	2,00			--
0003		MERL00006		SWITCH RELAY R502 024 H3M 1NO 80A	1,00			--
0004		METT00085		CONTACTOR 100A	1,00			--
0005		LAFN07746		BRACKET -	1,00			--
0009		MEVR01707		CONNECTOR -	1,00			--
0010		MEVR01079		PLUG M CB50 A 600V RD.	1,00			--
0011		LAFN06409		SUPPORT -	1,00			--
0012		VTRS15913		WASHER D. 4 GROVER A2 UNI1751	2,00			--
0013		VTVT00814		SCREW TE M.4-25	2,00			--
0014		VTVT00671		SCREW TC- M.2-16 OTTONE	2,00			--
0015		MECI00334		MICROSWITCH V4	1,00			--
0016		VTDD08634		NUT M2	2,00			--
0017		MEVR00604		FUSE	1,00			--
0018		MEVR02887		FUSE 40A NST.	1,00			--
0019		MEVR00604		FUSE	1,00			--
0020		MEVR01332		FUSE-HOLDER	3,00			--
0021		LAFN07460		SUPPORT -	1,00			--
0022		MEVR01380		FUSE A LAMA	1,00			--
0023		MEVR01428		FUSE A LAMA 2 A. UNIVAL	1,00			--
0024		MEVR01134		CARRYNG BAG	1,00			--
0025		MEVR00030		FUSE-HOLDER 4 VIE COPERCHIO TRAS.	1,00			--
0026		MEVR44054		INSULATOR M6 20-CH17	1,00			--
0030		LAFN07803		PLATE -	1,00			--
0031		GUVR00295		GASKET -	1,00			--
0032		VTDD00147		NUT M 4 INX U.5588	2,00			--
0033		VTRS15913		WASHER D. 4 GROVER A2 UNI1751	2,00			--
0034		VTRS13750		WASHER D. 5X14 INX	4,00			--
0035		VTVT01300		SCREW TE M5X12 INOX	4,00			--

Table: TANK

Progressive Number: 1

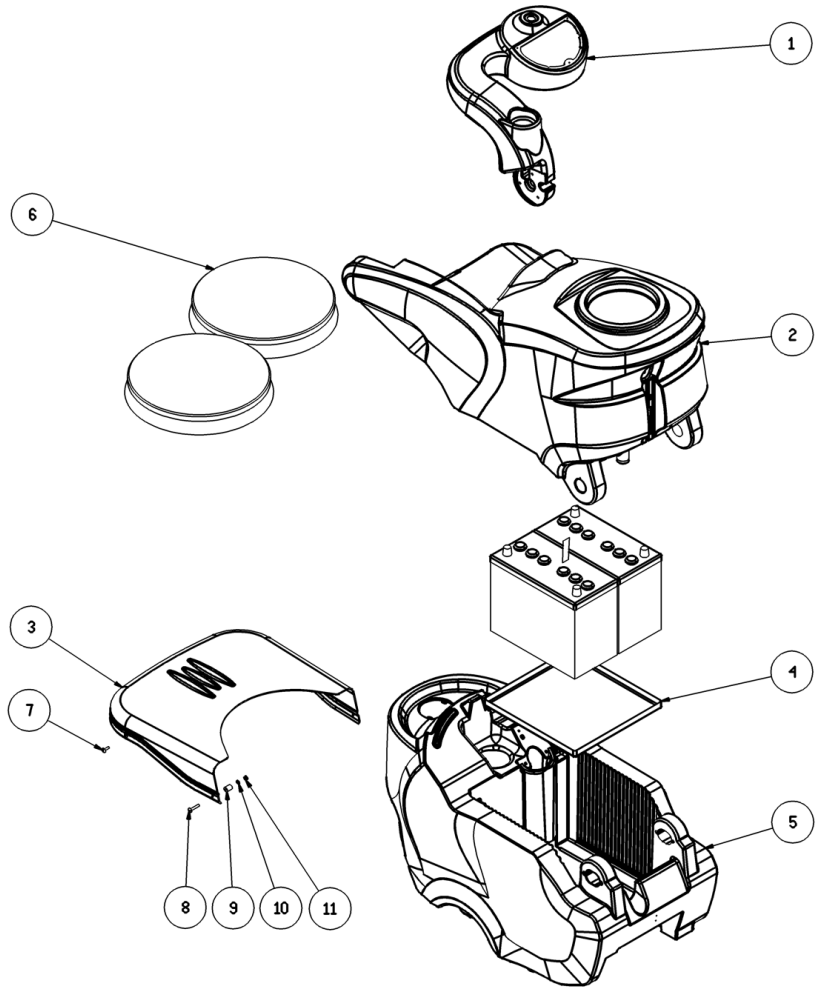

Ref.	K	Part N.	Customer Part N.	Description	Qty	Validity: From	To	Price
0001		MPVR05784		ARM CT70 RIDER	1,00			--
0002		MPVR05783		TANK RECUPERO CT70 RIDER ECS	1,00			--
0003		MPVR05779		COVER	1,00			--
0004		LAFN35588		BATTERY SUPPORTLAV. BT	1,00			--
0005		MPVR05559		TANK SOLUZIONE CT75	1,00			--
0006		SPPV47749		BRUSH NYLON 0.8 D.340 BT 7000	2,00			--
0007		VTVT00858		SCREW	2,00			--
0008		VTVT01370		SCREW M6X35	2,00			--
0009		MPVR05687		SPACER -	2,00			--
0010		VTRS00245		WASHER D.6 UNI 6592 INOX	2,00			--
0011		VTDD01694		NUT M 6 INX	2,00			--