PARTS LIST

CHARGER 2716 AB

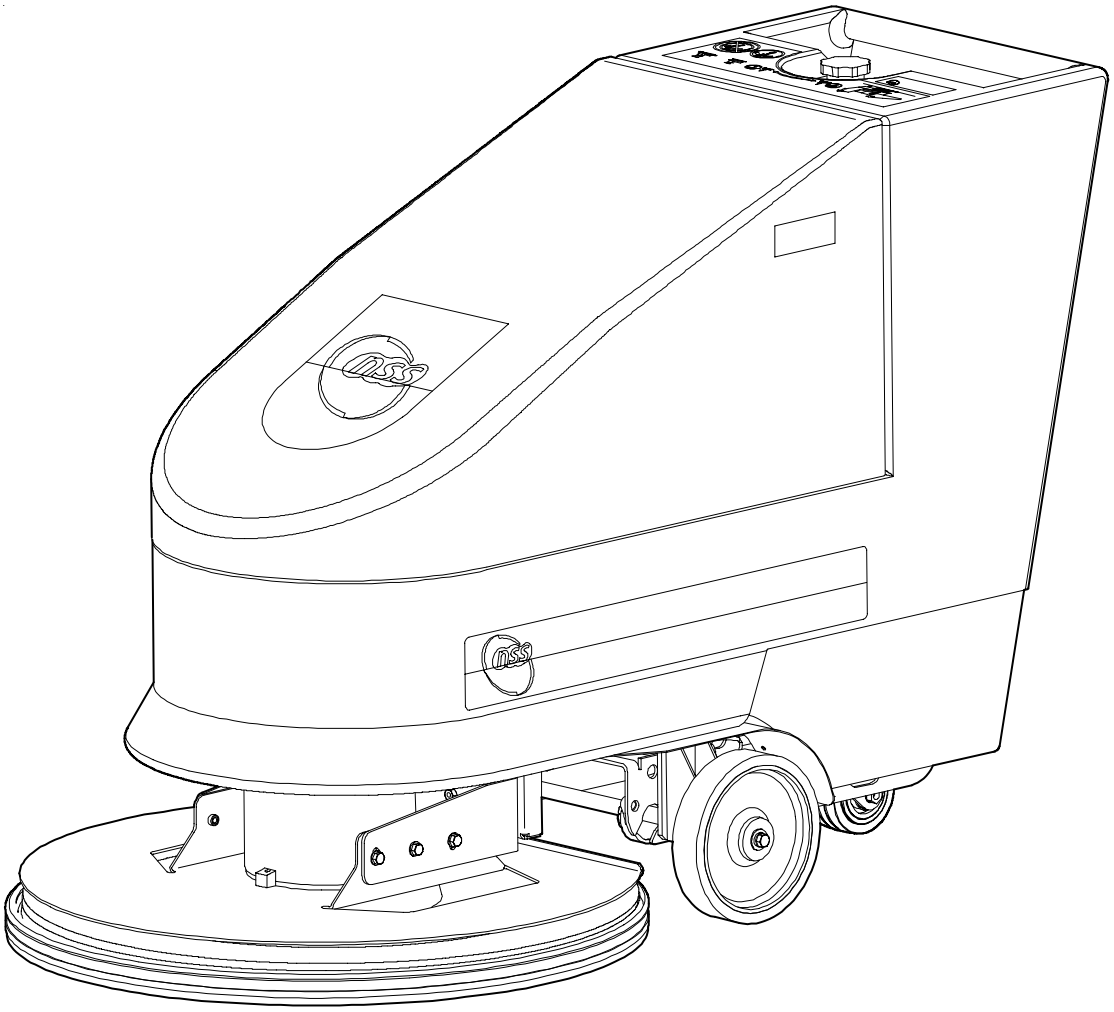

BASE - CHARGER 2716 AB

ITEM	PART NO.	DESCRIPTION	QTY.
101	6495511	CONTROL FRAME WELDMENT	1
102	9121390	11/32 I.D. X 11/16 O.D. X .051/.080 THICK SAE FLAT WASHER (5/16)	2
103	9121450	5/16-18 HEX NUT WITH NY-LOK INSERT	2
104	6495071	BASE PLATE	1
105	9121390	11/32 I.D. X 11/16 O.D. X .051/.080 THICK SAE FLAT WASHER (5/16)	2
106	9121520	5/16 SPLIT LOCK WASHER	2
107	9121640	5/16-18 X 3/4 HEX BOLT	2
108	6495241	BASE LEG CHARGER - LEFT	1
109	6492221	AXLE, BASE PLATED	1
110	6491871	END COUPLING ROUND BEAD CHAIN	1
111	9120380	10-24 X 3/8 ROUND HEAD PHILLIPS MACHINE SCREW	1
112	9120330	10 EXTERNAL STAR LOCK WASHER	1
113	6491860	ROUND BEAD CHAIN (CUT LENGTH 6”)	.5’
114	9121270	1/4-20 X 1 HEX BOLT	2
115	4894461	RUBBER STOP	2
116	6490701	CATCH ASSEMBLY	1
117	9120930	9/32 I.D. X 5/8 O.D. X .051/.080 THICK SAE FLAT WASHER (1/4)	2
118	9120900	1/4-20 HEX NUT WITH NY-LOK INSERT	2
119	9122100	3/8 SPLIT LOCK WASHER	4
120	9122220	3/8-16 X 3/4 HEX BOLT	4
121	6492061	RED 4 INCH CASTER - INCLUDES:	1
	4490391	CASTER WHEEL WITH BEARING	1
122	9122260	3/8-16 X 1 HEX BOLT	4
123	9122100	3/8 SPLIT LOCK WASHER	4
124	6495141	CASTER MOUNT	1
125	6495151	FRAME	1
126	6495231	BASE LEG CHARGER - RIGHT	1
127	9122260	3/8-16 X 1 HEX BOLT	4
128	9122100	3/8 SPLIT LOCK WASHER	4
129	6495271	AXLE BLOCK	2
130	9120637	1/4-20 X 1/4 SET SCREW - CUP POINT	2
131	4492791	BUSHING, PIVOT	2
132	9122450	17/32 I.D. X 1 1/16 O.D. X .074/.121 THICK SAE FLAT WASHER (1/2)	2
133	9122420	1/2 SPLIT LOCK WASHER	2
134	9122540	1/2-13 X 1 1/4 HEX BOLT	2
135	9122260	3/8-16 X 1 HEX BOLT	2
136	9122100	3/8 SPLIT LOCK WASHER	2
137	9122180	13/32 I.D. X 13/16 O.D. X .051/.080 THICK WROUGHT WASHER (3/8)	2
138	4490511	WHEEL - 8”	2
139	9122495	1/2-13 HEX NUT WITH NY-LOK INSERT - THIN	2
140	6492211	BASE ASSEMBLY LEG EXTENDER	2
141	9122540	1/2-13 X 1 1/4 HEX BOLT	2
142	9122420	1/2 SPLIT LOCK WASHER	2
143	9122450	17/32 I.D. X 1 1/16 O.D. X .074/.121 THICK SAE FLAT WASHER (1/2)	2
144	6490691	LIFT ARM	2
145	4495141	LIFT ARM SPACER	2
146	6495501	PIVOT WELDMENT	1
147	9122220	3/8-16 X 3/4 HEX BOLT	6
148	9122100	3/8 SPLIT LOCK WASHER	6
149	4492791	BUSHING, PIVOT	2
150	9122450	17/32 I.D. X 1 1/16 O.D. X .074/.121 THICK SAE FLAT WASHER (1/2)	2
151	9122540	1/2-13 X 1 1/4 HEX BOLT	2
152	9121470	5/16-18 X 1 FLAT HEAD PHILLIPS MACHINE SCREW	4

BASE - CHARGER 2716 AB

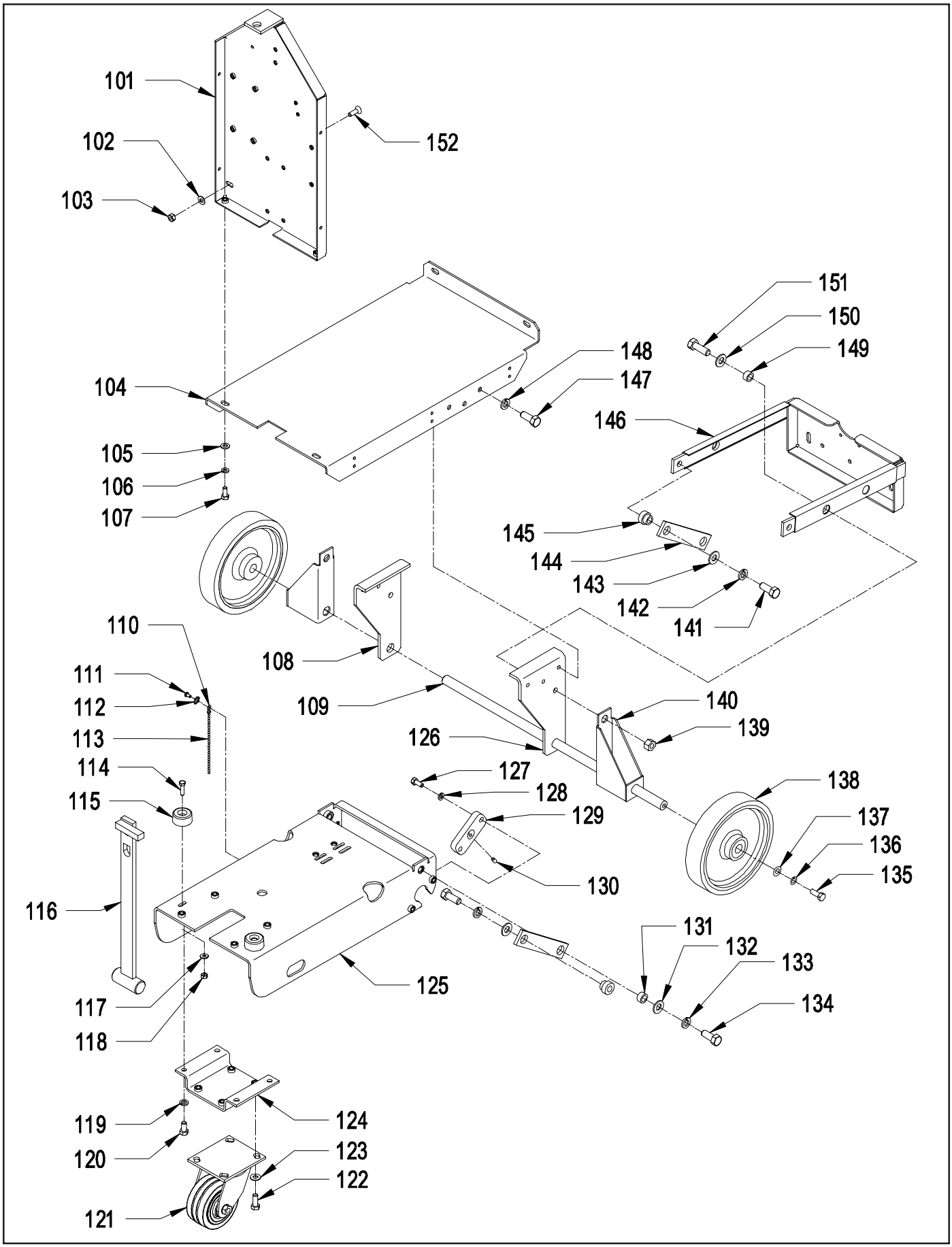

SHIELD AND PAD DRIVER

ITEM	PART NO.	DESCRIPTION	QTY.
201	6492051	STUD TERMINAL BOOT - RUBBER	2
202	6495641	MOTOR 36 VOLT	1
203	6495093	STEEL SKIRT / MOTOR MOUNT	1
204	6492163	PIVOT FORK	1
205	9121390	11/32 I.D. X 11/16 O.D. X .051/.080 THICK SAE FLAT WASHER (5/16)	4
206	9121520	5/16 SPLIT LOCK WASHER	4
207	9121640	5/16-18 X 3/4 HEX BOLT	4
208	9121390	11/32 I.D. X 11/16 O.D. X .051/.080 THICK SAE FLAT WASHER (5/16)	3
209	9121520	5/16 SPLIT LOCK WASHER	3
210	9121640	5/16-18 X 3/4 HEX BOLT	3
211	6495501	PIVOT WELDMENT	1
212	4495441	HOSE CLAMP, 1 9/16" - 2 1/2" DIAMETER	1
213	3392561	VAC EXHAUST HOSE	1
214	4495531	END CUFF - 2"	1
215	6495459	CW-FLEXIWALL SHIELD ASSEMBLY - INCLUDES:	1
215A	6592552	BUMPER STRAP	1
215B	9120350	10-24 HEX NUT WITH NY-LOK INSERT	1
215C	9120450	10-24 X 1 ROUND HEAD PHILLIPS MACHINE SCREW	1
215D	6592531	BUMPER / BRUSH	1
216	6492558	DRIVER, PAD - 27” ASSEMBLED & BALANCED	1
217	9121985	13/32 I.D. X 1 O.D. X .12 THICK FLAT WASHER (11 GAGE)	1
218	9121520	5/16 SPLIT LOCK WASHER	1
219	9121490	5/16-24 X 7/8 HEX BOLT	1
220	5990731	SPRING CLIP PAD HOLDER SET - INCLUDES:	1
220A	9120810	10 X 1/2 PAN HEAD PHILLIPS SHEET METAL SCREW	3
221	9120815	3/16 SQUARE X 1/2 LONG KEY - STEEL	1
222	9120980	1/4-20 X 1 SOCKET HEAD CAP SCREW	3
223	9120880	1/4 SPLIT LOCK WASHER	3
224	9120950	1/4 X 1 1/4 FENDER WASHER	3
225	5796101	PAPER BAG - 5 PACK	1
	6592801	VAC TRAC COLLECTION BAG - OPTIONAL	1
226	9122020	3/8 DIAMETER X 3/8 LONG SOCKET HEAD SHOULDER BOLT (5/16-18)	2
227	9121400	3/8 I.D. X 7/8 O.D. X .064/.104 THICK WROUGHT WASHER	2
228	2691181	PIVOT SPACER	2
229	9997590	METAL CORE QUICKEDGE TRIM (CUT TO 66”)	5.5’

SHIELD AND PAD DRIVER

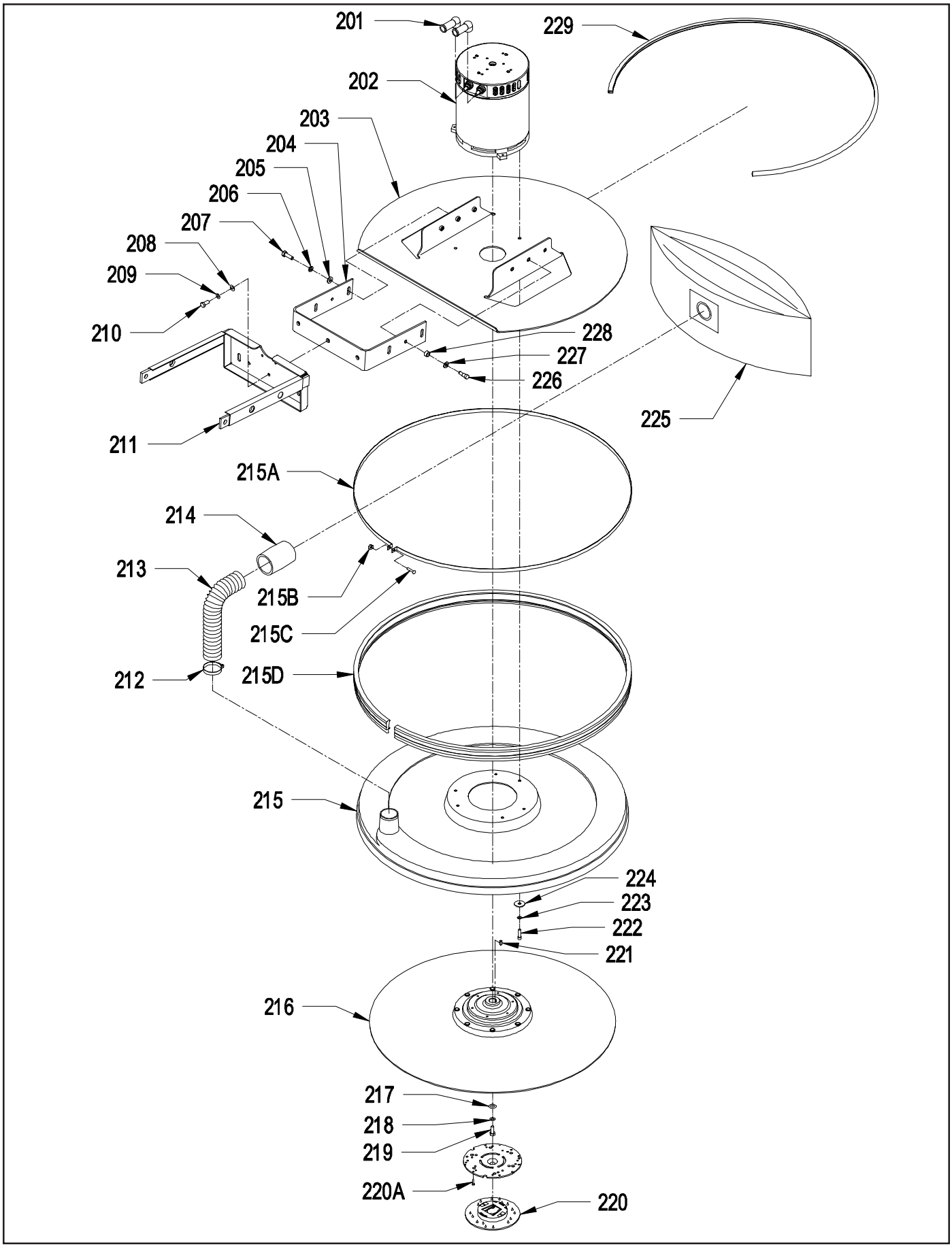

CONTROL FRAME - CHARGER 2716 AB

ITEM	PART NO.	DESCRIPTION	QTY.
301	4490521	LOAD ADJUST KNOB (INCLUDES SET SCREW)	1
302	9122450	17/32 I.D. X 1 1/16 O.D. X .074/.121 THICK SAE FLAT WASHER (1/2)	2
303	9122705	1/2 I.D. X 3/4 O.D. X .01 THICK 1 WAVE SPRING WASHER (1/2)	1
304	6490611	ADJUSTMENT ROD	1
305	6490621	ADJUSTMENT ROD COLLAR	2
306	9122180	13/32 I.D. X 13/16 O.D. X .051/.080 THICK SAE FLAT WASHER (3/8)	1
307	4490561	INSULATED STANDOFF	1
308	9120970	1/4 EXTERNAL STAR LOCK WASHER	1
309	9121210	1/4-20 X 5/8 HEX BOLT	1
310	4491011	SOLENOID, 36 VOLT	1
311	9120930	9/32 I.D. X 5/8 O.D. X .051/.080 THICK SAE FLAT WASHER (1/4)	2
312	9120880	1/4 SPLIT LOCK WASHER	2
313	9121170	1/4-20 X 1/2 HEX BOLT	2
314	9121287	1/4-20 X 2 1/2 HEX BOLT - STEEL	1
315	2791281	BUSHING SPACER	2
316	2791281	BUSHING SPACER	2
317	9120930	9/32 I.D. X 5/8 O.D. X .051/.080 THICK SAE FLAT WASHER (1/4)	2
318	9120900	1/4-20 HEX NUT WITH NY-LOK INSERT	2
319	6490601	ADJUSTMENT BRACKET	1
320	4495326	SWITCH BRACKET	1
321	9120370	7/32 I.D. X 1/2 O.D. X .032/.065 THICK SAE FLAT WASHER (10)	2
322	9120320	10 SPLIT LOCK WASHER	2
323	9120460	10-24 X 1 1/4 ROUND HEAD PHILLIPS MACHINE SCREW	2
324	4491071	SNAP SWITCH	1
325	9120130	6 EXTERNAL STAR LOCK WASHER	2
326	9120090	6-32 X 7/8 PAN HEAD PHILLIPS MACHINE SCREW	2
327	9120900	1/4-20 HEX NUT WITH NY-LOK INSERT	2
328	4490601	KNOB, RAISE / LOWER ROD	1
329	6490101	LATCH HANDLE	1
330	6490093	LATCH ASSEMBLY	1
331	4495351	SPACER GUIDE	4
332	4490631	COMPRESSION SPRING	1
333	9122450	17/32 I.D. X 1 1/16 O.D. X .074/.121 THICK SAE FLAT WASHER (1/2)	2
334	9120880	1/4 SPLIT LOCK WASHER	4
335	9121145	1/4-20 X HEX BOLT	4
336	9120970	1/4 EXTERNAL STAR LOCK WASHER	2
337	9120920	1/4-20 HEX NUT	2
338	9120320	10 SPLIT LOCK WASHER	2
339	9120410	10-24 X 1/2 ROUND HEAD PHILLIPS MACHINE SCREW	2
340	4491031	SHUNT	1
341	6492271	COUNTER POISE	1
342	6490701	CATCH ASSEMBLY	1
343	6495071	BASE PLATE	1
344	9121520	5/16 SPLIT LOCK WASHER	2
345	9121640	5/16-18 X 3/4 HEX BOLT	2
346	9121390	11/32 I.D. X 11/16 O.D. X .051/.080 THICK SAE FLAT WASHER (5/16)	2
347	9123005	1/8 X 5 1/2 WIRE TIE	4
348	6495511	CONTROL FRAME WELDMENT	1
349	9120970	1/4 EXTERNAL STAR LOCK WASHER	2
350	9121270	1/4-20 X 1 HEX BOLT	2
351	4492803	TOP SUPPORT BRACKET	1
352	9121640	5/16-18 X 3/4 HEX BOLT	2
353	9121520	5/16 SPLIT LOCK WASHER	2
354	9121390	11/32 I.D. X 11/16 O.D. X .051/.080 THICK SAE FLAT WASHER (5/16)	2
355	9121400	3/8 I.D. X 7/8 O.D. X .064/.104 THICK WROUGHT WASHER (5/16)	2
356	9121480	5/16-18 X 1 ROUND HEAD PHILLIPS MACHINE SCREW	2
357	9121160	1/4-20 X 3/8 HEX BOLT	1
358	9120880	1/4 SPLIT LOCK WASHER	4
359	9120310	1/8 X 3/4 COTTER PIN	3

CONTROL FRAME - CHARGER 2716 AB

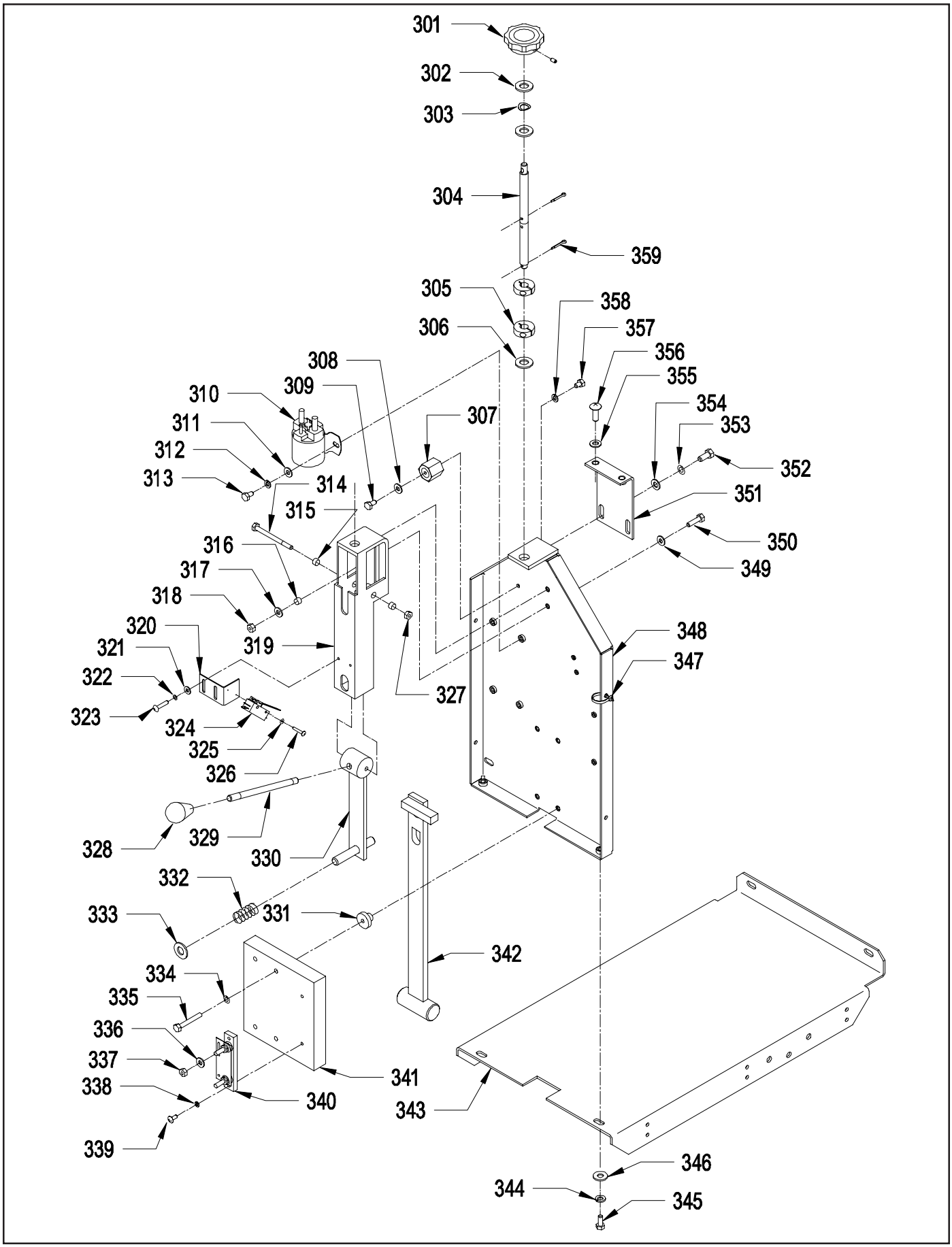

HOUSING - CHARGER 2716 AB

ITEM	PART NO.	DESCRIPTION	QTY.
401	3392561	VAC EXHAUST HOSE	1
402	6495301	BATTERY WARNING DECAL	1
403	6491171	SOFT DRAW LATCH WITH CONCEALED KEEPER	1
404	6493101	NAME IDENTIFIER DECAL CHARGER 2716 AB	1
405	9121400	3/8 I.D. X 7/8 O.D. X .064/.104 THICK WROUGHT WASHER (5/16)	2
406	9121480	5/16-18 X 1 ROUND HEAD PHILLIPS MACHINE SCREW	2
407	4490521	LOAD ADJUST KNOB - INCLUDES:	1
407A	9120650	10-32 X 3/4 SET SCREW	1
408	4491041	RPM METER WITH HARDWARE	1
409	2691981	LIGHT - INDICATOR, GREEN, 35 VOLT, WITH CLIP	1
410	4491101	TOGGLE SWITCH, MOTOR	1
411	9122465	.516 I.D. X .813 O.D. X .027/.030 THICK FLAT WASHER	1
412	0691851	1/2 INTERNAL STAR LOCK WASHER	1
413	0798821	5/8 HEX NUT	1
414	6492801	DASH PANEL DECAL	1
415	4492901	SWITCH PLATE - RIGHT	1
416	9121270	1/4-20 X 1 HEX BOLT	2
417	4492881	SWITCH PLATE - LEFT	1
418	9122180	13/32 I.D. X 13/16 O.D. X .051/.080 THICK SAE FLAT WASHER (3/8)	2
419	4491051	BATTERY METER 36 VOLT	1
420	4491071	SNAP SWITCH	1
421	9120040	6 INTERNAL STAR LOCK WASHER	2
422	9120090	6-32 X 7/8 PAN HEAD PHILLIPS MACHINE SCREW	2
423	2791281	BUSHING SPACER	2
424	9122120	3/8 I.D. X 5/8 O.D. X .031 THICK 1 WAVE SPRING WASHER (3/8)	4
425	9120900	1/4-20 HEX NUT WITH NY-LOK INSERT	2
426	9120930	9/32 I.D. X 5/8 O.D. X .051/.080 THICK SAE FLAT WASHER (1/4)	2
427	9120510	10-24 X 1/2 TRUSS HEAD PHILLIPS MACHINE SCREW	4
428	4493046	HANDLE	1
429	9120360	10-24 HEX NUT WITH STAR LOCK WASHER	1
430	9120370	7/32 I.D. X 1/2 O.D. X .032/.065 THICK SAE FLAT WASHER (10)	1
431	9120480	10-24 X 1 3/4 ROUND HEAD PHILLIPS MACHINE SCREW	1
432	9120090	6-32 X 7/8 PAN HEAD PHILLIPS MACHINE SCREW	2
433	4491901	CHARGER PLUG ONLY - GRAY 36 VOLT	1
	6490821	WIRE ASSEMBLY, ANDERSON TO SOL./STANDOFF 36 VOLT	1
434	9120790	10 X 5/8 PAN HEAD PHILLIPS SHEET METAL SCREW	8
435	6492891	DECAL PAD POSITION	1
436	4490641	EXTENSION SPRING	1
437	9120350	10-24 HEX NUT WITH NY-LOK INSERT	1
438	6491261	CIRCUIT BREAKER - 90 AMP/ETA	1
439	9120020	6-32 HEX NUT WITH STAR LOCK WASHER	2
440	6492931	WIRING DIAGRAM DECAL	1
441	6490951	1/4 MIPT PLUG	2
442	6495491	REAR COVER PANEL	1
443	6490011	HOUSING WITH SLIDE RAILS	1
443A	6495441	SLIDE RAIL, LEFT	1
443B	9120920	1/4-20 HEX NUT	4
443C	9121039	1/4-20 X 1 1/2 ELEVATOR BOLT - ZINC PLATED	4
443D	9120900	1/4-20 HEX NUT WITH NY-LOK INSERT	6
443E	9120930	9/32 I.D. X 5/8 O.D. X .051/.080 THICK SAE FLAT WASHER (1/4)	6
443F	6495431	SLIDE RAIL, RIGHT	1
443G	9121037	1/4-20 X 5/8 FLAT HEAD PHILLIPS HEAD PHILLIPS MACHINE SCREW	6
444	6495791	ENGLISH/SPANISH OPERATION DECAL	1
445	9120790	#10 X 5/8 PAN HEAD PHILLIPS SHEET METAL SCREW	10
446	6492243	RIGHT FENDER	1
	6492233	LEFT FENDER	1
447	6493061	SIDE DECAL - 3.5 X 26	2
448	6491211	TAPPING PLATE	2
449	6491171	SOFT DRAW LATCH WITH CONCEALED KEEPER	1
450	6491193	HOOD STOP / SUPPORT BRACKET	2
451	9120930	9/32 I.D. X 5/8 O.D. X .051/.080 THICK SAE FLAT WASHER (1/4)	4
452	9120880	1/4 SPLIT LOCK WASHER	4
453	9121270	1/4-20 X 1 HEX BOLT	4
454	6492261	RUBBER MOTOR COVER	1
455	4495531	END CUFF - 2"	1
456	9120185	5/32 I.D. X 1/2 O.D. WASHER - STEEL - ZINC PLATE	4
457	5796101	PAPER BAG - 5 PACK	1
	6592801	CLOTH FILTER BAG (OPTIONAL)	1
458	9120317	5/32 X 5/8 DOME HEAD POP RIVET - STEEL	4
459	6492871	HOOD DECAL	1
460	9120317	5/32 X 5/8 DOME HEAD POP RIVET - STEEL	4
461	9120185	5/32 I.D. X 1/2 O.D. WASHER - STEEL - ZINC PLATE	4

HOUSING - CHARGER 2716 AB

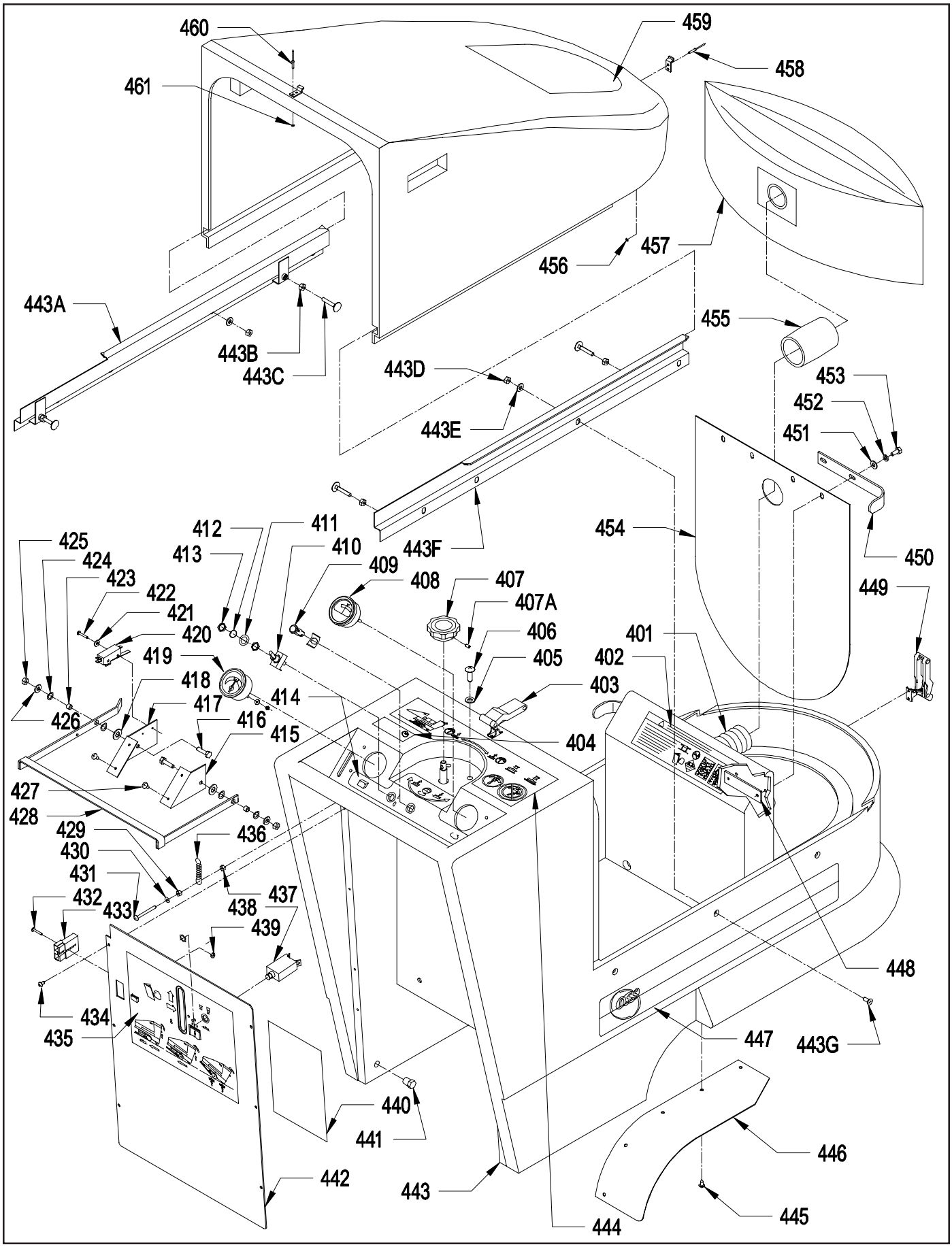

WIRING DIAGRAM - CHARGER 2716 AB

ITEM	PART NO.	DESCRIPTION	QTY.
1	6490801	WIRE ASSEMBLY, BREAKER TO SHUNT	1
2	6490811	WIRE ASSEMBLY, SOLENOID TO BREAKER	1
3	6490821	WIRE ASSEMBLY, ANDERSON TO SOLENOID / STANDOFF	1
4	6495121	WIRE ASSEMBLY, SHUNT TO MOTOR	1
5	6495131	WIRE ASSEMBLY, MOTOR TO STANDOFF	1
6	6490851	WIRE ASSEMBLY, SOLENOID TO MAIN SWITCH	1
7	6490861	WIRE ASSEMBLY, SOLENOID / LIGHT / VOLT METER TO STANDOFF	1
8	6490871	WIRE ASSEMBLY. SAFETY SWITCH TO VOLT METER / MAIN SWITCH TO LIGHT	1
9	6490881	WIRE ASSEMBLY, HANDLE SWITCH TO SAFETY SWITCH	1
10	6490891	WIRE ASSEMBLY, SOLENOID TO HANDLE SWITCH	1
11	7691661	WIRE ASSEMBLY, ANDERSON - POS./NEG. BATTERY 36 VOLT	1
17	6491831	WIRE ASSEMBLY, ANDERSON TO SOLENOID / STANDOFF	1
97	2391981	BATTERY JUMPER 3/8" RING #97	2
-	2397361	HOUR METER - OPTIONAL	1
-	2691981	INDICATOR LIGHT - GREEN LENS / 35 VOLT WITH CLIP	1
-	4490561	INSULATED STANDOFF	1
-	4491011	SOLENOID - 36 VOLT	1
-	4491031	SHUNT	1
-	4491041	RPM METER WITH HARDWARE	1
-	4491051	BATTERY METER 36 VOLT WITH HARDWARE	1
-	4491061	BATTERY - 210 AMP/HR, 12 VOLT	3
-	4491071	SNAP SWITCH	2
-	4491101	TOGGLE SWITCH - MOTOR	1
-	4491901	CHARGER PLUG ONLY - GRAY 36 VOLT	1
-	6491261	CIRCUIT BREAKER - 90 AMP/ETA	1
-	6491841	175 AMP ANDERSON WITH CONTACTS GRAY 36 VOLT	2
-	6492251	MOTOR, 36 VOLT – 1500 RPM - 3 HP	1
-	6495621	HOUR METER LEADS - OPTIONAL	1
-	9123005	1/8 X 5 1/2 WIRE TIE	6

WIRING DIAGRAM - CHARGER 2716 AB

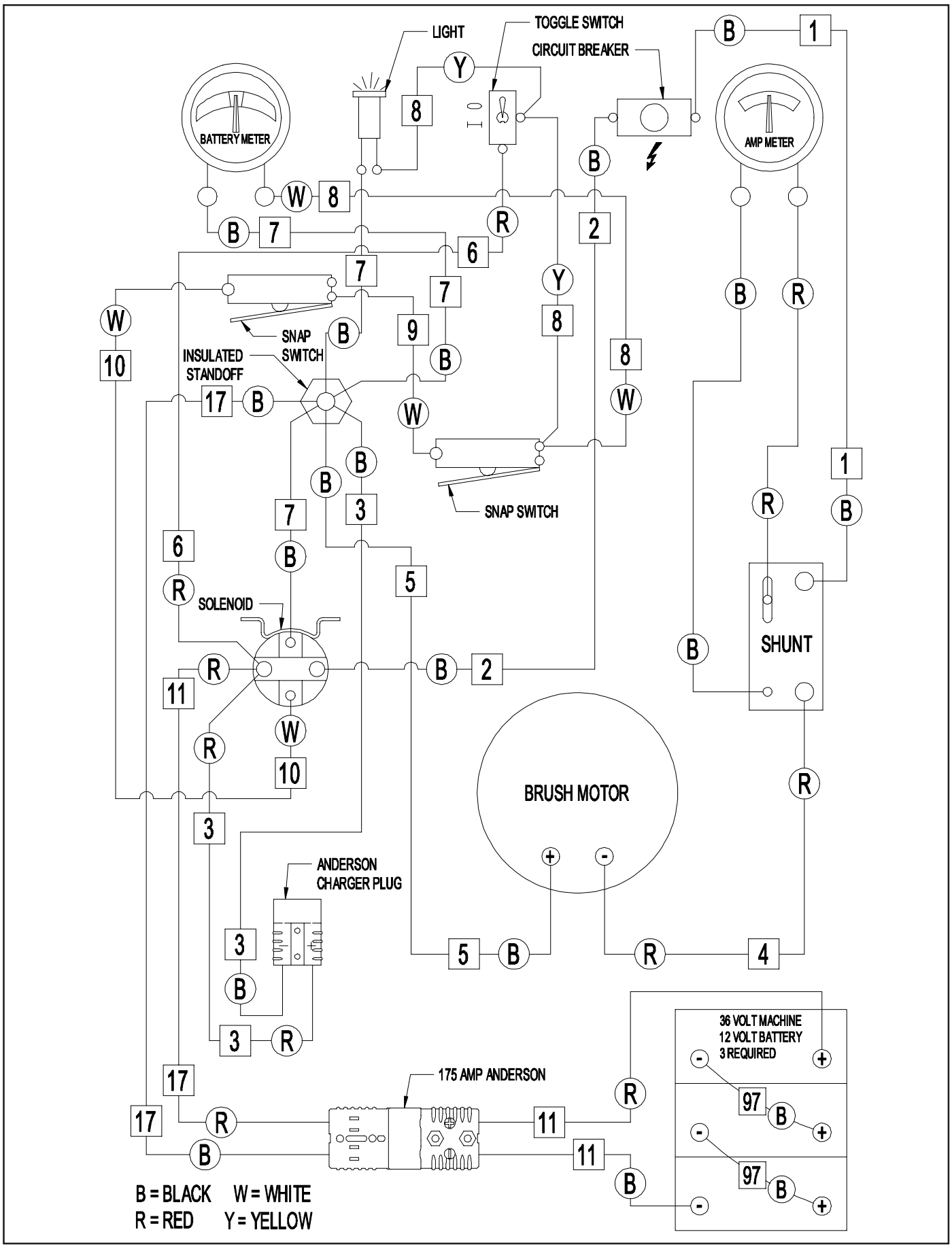

MOTOR

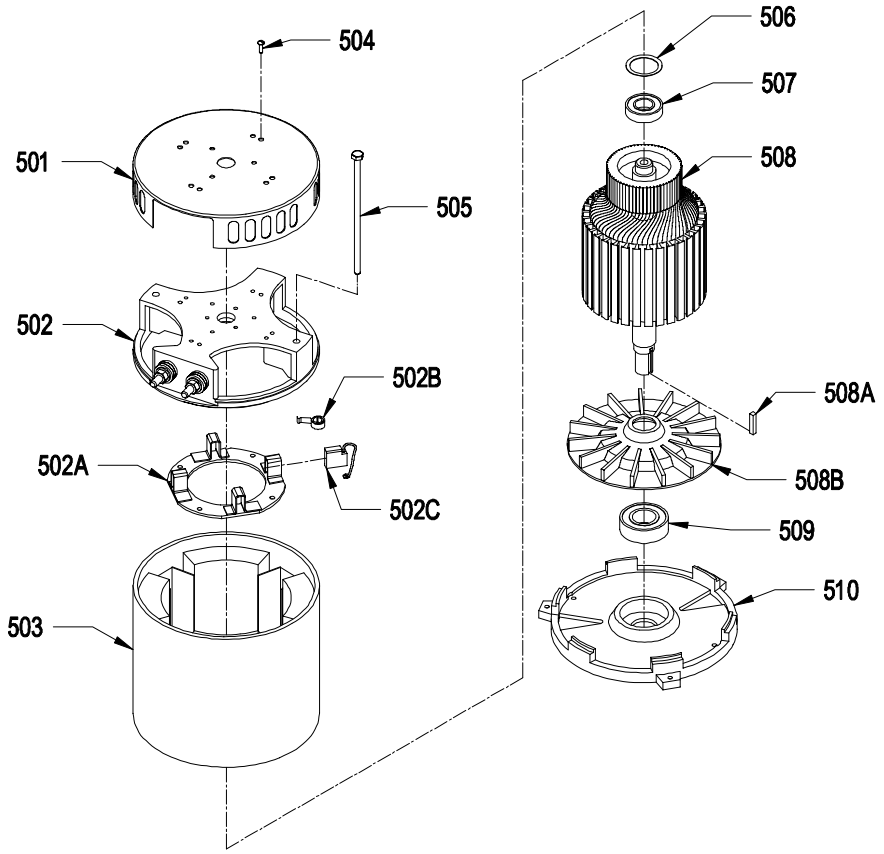

ITEM	PART NO.	DESCRIPTION	QTY.
	6495641	MOTOR 36 VOLT, 1500 RPM, 3 HP - INCLUDES:	1
501	5991731	COMMUTATOR BRACKET COVER	1
	6493531	COMMUTATOR BRACKET ASSEMBLY - INCLUDES:	1
502	6493541	COMMUTATOR BRACKET	1
502A	6493601	BRUSH BOARD ASSEMBLY - INCLUDES:	1
502B	6493591	SPRING	2
502C	7692041	CARBON BRUSH	2
503	6493631	STATOR FRAME ASSEMBLY - WITH CLIPS AND MAGNETS - 3 HP	1
504	9120600	10-24 X 1/2 PAN HEAD PHILLIPS THREAD CUTTING SCREW	4
505	6493621	1/4-20 X 9 HEX HEAD THRU BOLT - 3 HP	2
506	5991741	HELICAL WASHER - LARGE	1
507	5991551	BEARING - TOP END	1
508	6493641	ARMATURE - 1500 RPM - 3 HP - INCLUDES:	1
508A	9120827	3/16 SQUARE X 1 LONG KEY - STEEL	1
508B	6493571	ALUMINUM FAN	1
509	5991541	BEARING - BOTTOM END	1
510	6493551	BEARING END BRACKET	1

NSS ® Enterprises, Inc.

3115 Frenchmens Road, Toledo, Ohio 43607

PHONE (419) 531-2121 FAX (419) 531-3761

NSS ® Enterprises, Inc. European Distribution Centre
Unit II, Pinfold Trading Estate * 55 Nottingham Road
STAPLEFORD, NOTTINGHAM NG9 8AD ENGLAND U.K.

PHONE: (44) 0115 939 1568 * FAX: (44) 0115 949 0615