Frame Assembly

Model :99695 BR 22/14

	Number	Description	Qty Req.
1	47101100	BUSHING	4
2	60510004	WASHER, LOCK	4
3	48002500	BASE, BATTERY	1
4	60110811	SCREW	1
5	46102100	FRAME	1
6	20201010	HOLDFAST, GEARED MOTOR	2
7	20201020	PROTECTION, GEARED MOTOR	1
8	60220802	NUT, LOCK	2
9	61940001	CLIP	1
10	60306007	WASHER	2
11	60220601	NUT, LOCK	2
12	60313002	WASHER	2
13	60221201	NUT, LOCK	2
14	46531020	CASTOR WHEEL	2
15	60111023	SCREW	2
16	60211004	NUT	2
18	60111203	SCREW	2
19	60180603	SCREW S.S.	4
20	49802024	CABLE BLACK, BATTERY BRIDGE	3
21	18237	CONNECTOR-HOUSING	1
22	60180605	SCREW	2
23	60100601	SCREW	1
24	20201030	PEDAL STOP	1
25	60305005	WASHER	1
26	60190424	SCREW	1
29	60190418	SCREW	2

Frame Assembly, Model:99695 BR 22/14

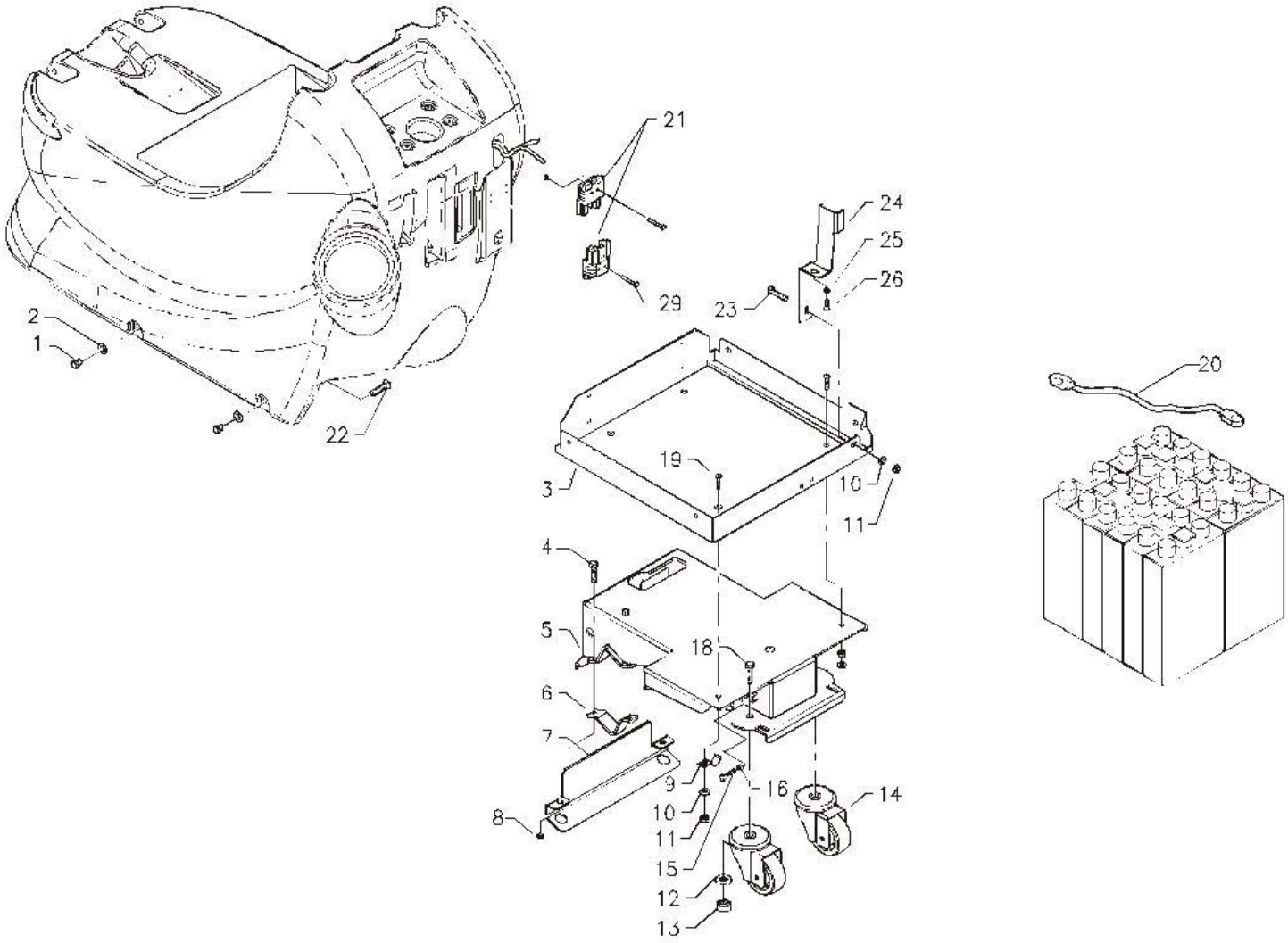

Brush Base Control Assembly

Model :99695 BR 22/14

	Number	Description	Qty Req.
1	20203050	BOLT ARMS, STUD	2
2	60220801	NUT, LOCK	2
3	60506005	WASHER, LOCK	2
4	60210608	NUT	2
5	20203100	ARM	1
6	60221002	NUT, LOCK	2
7	20203020	ARM ADJUSTER	2
8	20203060	SPRING GUIDE	2
9	47210100	SPRING, COMPRESSION	2
10	60211006	NUT, LOCK	2
11	20203530	ARM	2
12	60220801	NUT, LOCK	2
13	60308004	WASHER	1
14	60110811	SCREW	1
15	60220801	NUT, LOCK	1
16	20201500	PLATE HOLDFASTS	1
17	20203520	BASE CONTROL, HOLDFAST	4
18	60100607	SCREW	8
19	60220601	NUT, LOCK	8
20	20203110	SPACER	1
21	60110604	SCREW	2
22	20203500	PEDAL PLAQUE	1
23	20103040	COVER, PEDAL	1
24	47220140	SPRING, TRACTION	1
25	62406015	INSERT	1
26	62406005	TIE ROD	1
27	20206560	BRACKET	1
28	20203550	BUSHING, SPHERICAL	1
29	60210805	NUT	1
30	61708003	NUT, WING	1

Brush Base Control Assembly, Model:99695 BR 22/14

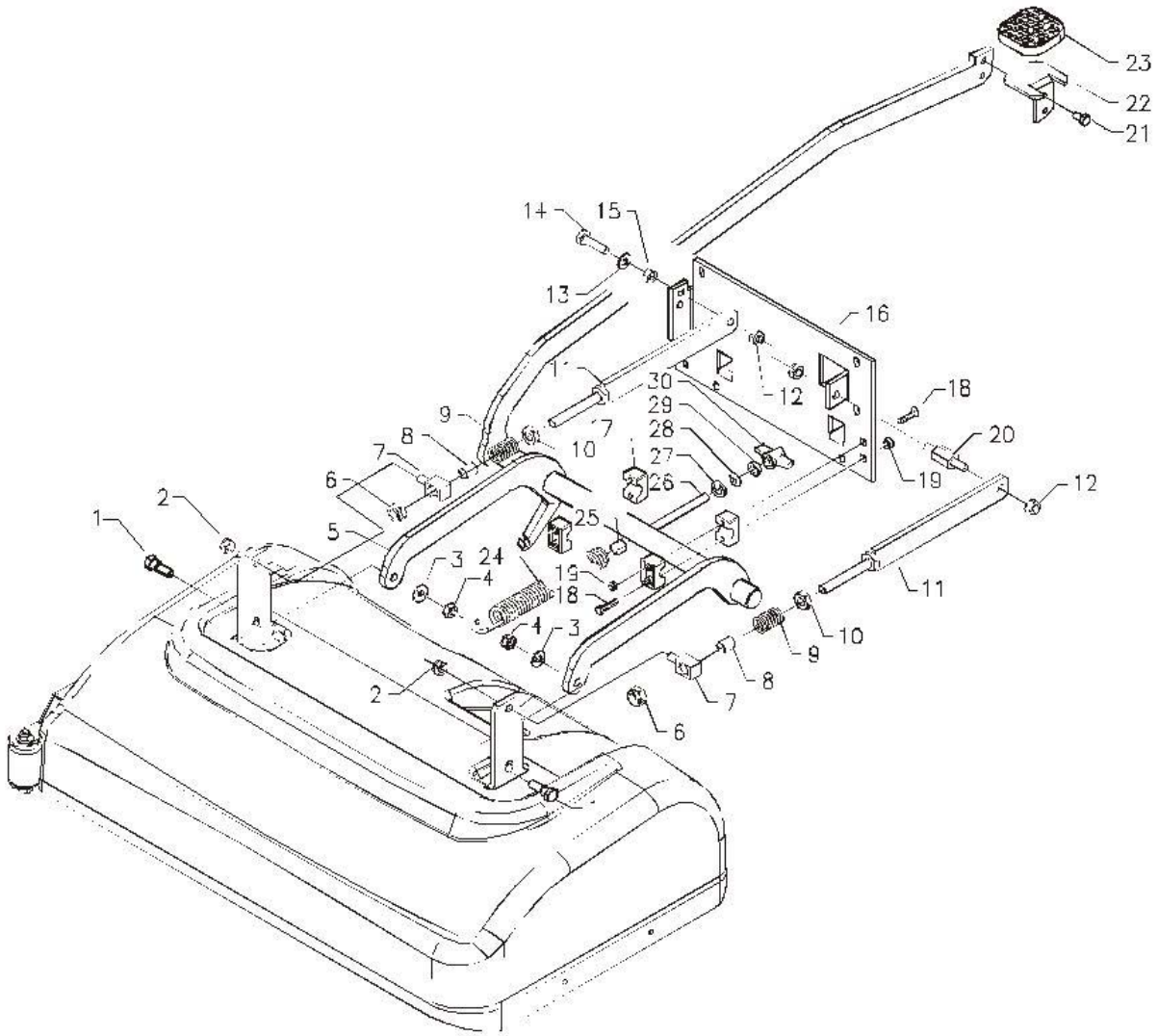

Brush Base Control Assembly

Model :99695 BR 22/14

	Number	Description	Qty Req.
1	20203050	BOLT ARMS, STUD	2
2	60220801	NUT, LOCK	2
3	60506005	WASHER, LOCK	2
4	60210608	NUT	2
5	20203100	ARM	1
6	60221002	NUT, LOCK	2
7	20203020	ARM ADJUSTER	2
8	20203060	SPRING GUIDE	2
9	47210100	SPRING, COMPRESSION	2
10	60211006	NUT, LOCK	2
11	20203530	ARM	2
12	60220801	NUT, LOCK	2
13	60308004	WASHER	1
14	60110811	SCREW	1
15	60220801	NUT, LOCK	1
16	20201500	PLATE HOLDFASTS	1
17	20203520	BASE CONTROL, HOLDFAST	4
18	60100607	SCREW	8
19	60220601	NUT, LOCK	8
20	20203110	SPACER	1
21	60110604	SCREW	2
22	20203500	PEDAL PLAQUE	1
23	20103040	COVER, PEDAL	1
24	47220140	SPRING, TRACTION	1
25	62406015	INSERT	1
26	62406005	TIE ROD	1
27	20206560	BRACKET	1
28	20203550	BUSHING, SPHERICAL	1
29	60210805	NUT	1
30	61708003	NUT, WING	1

Brush Base Control Assembly, Model:99695 BR 22/14

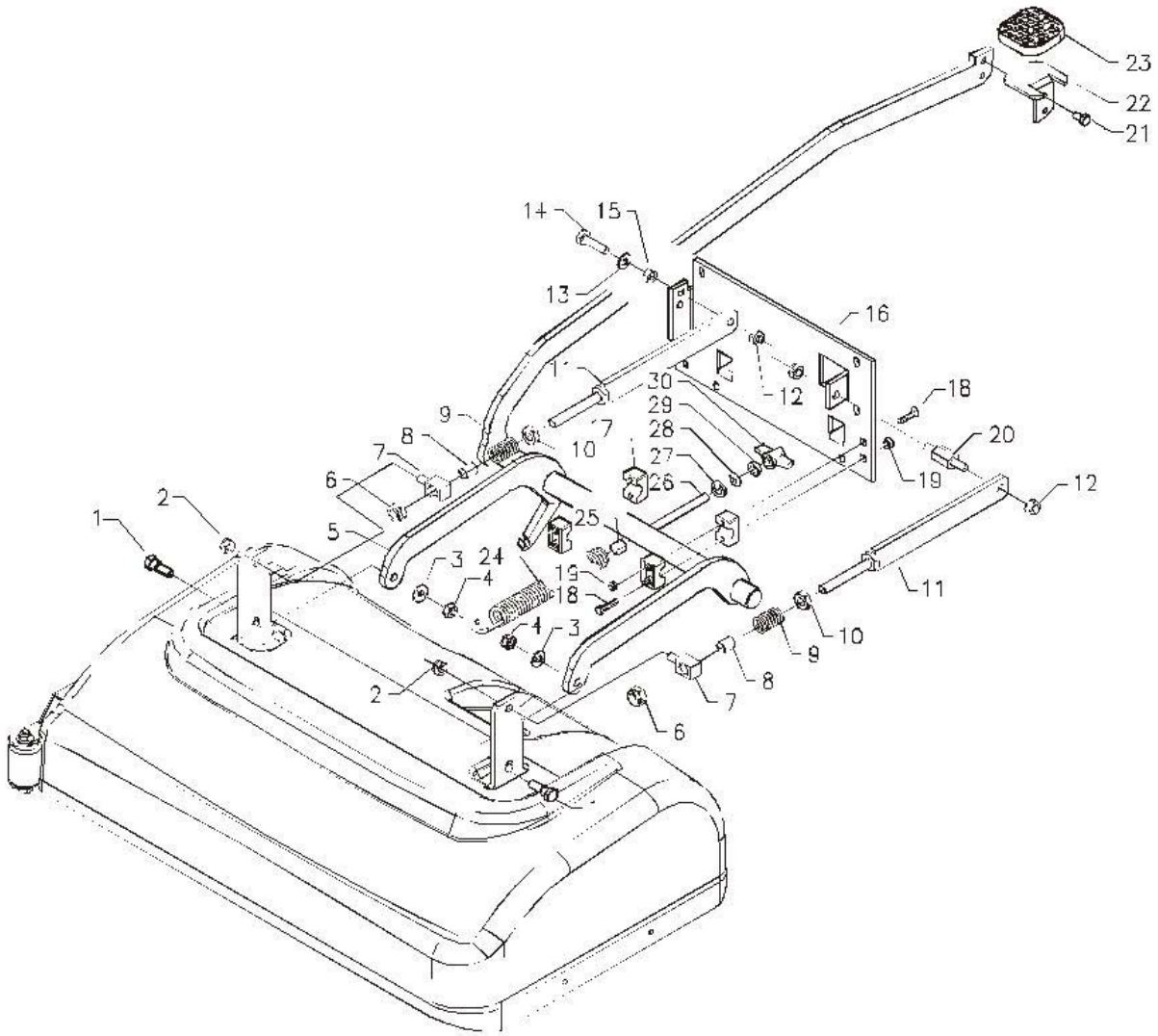

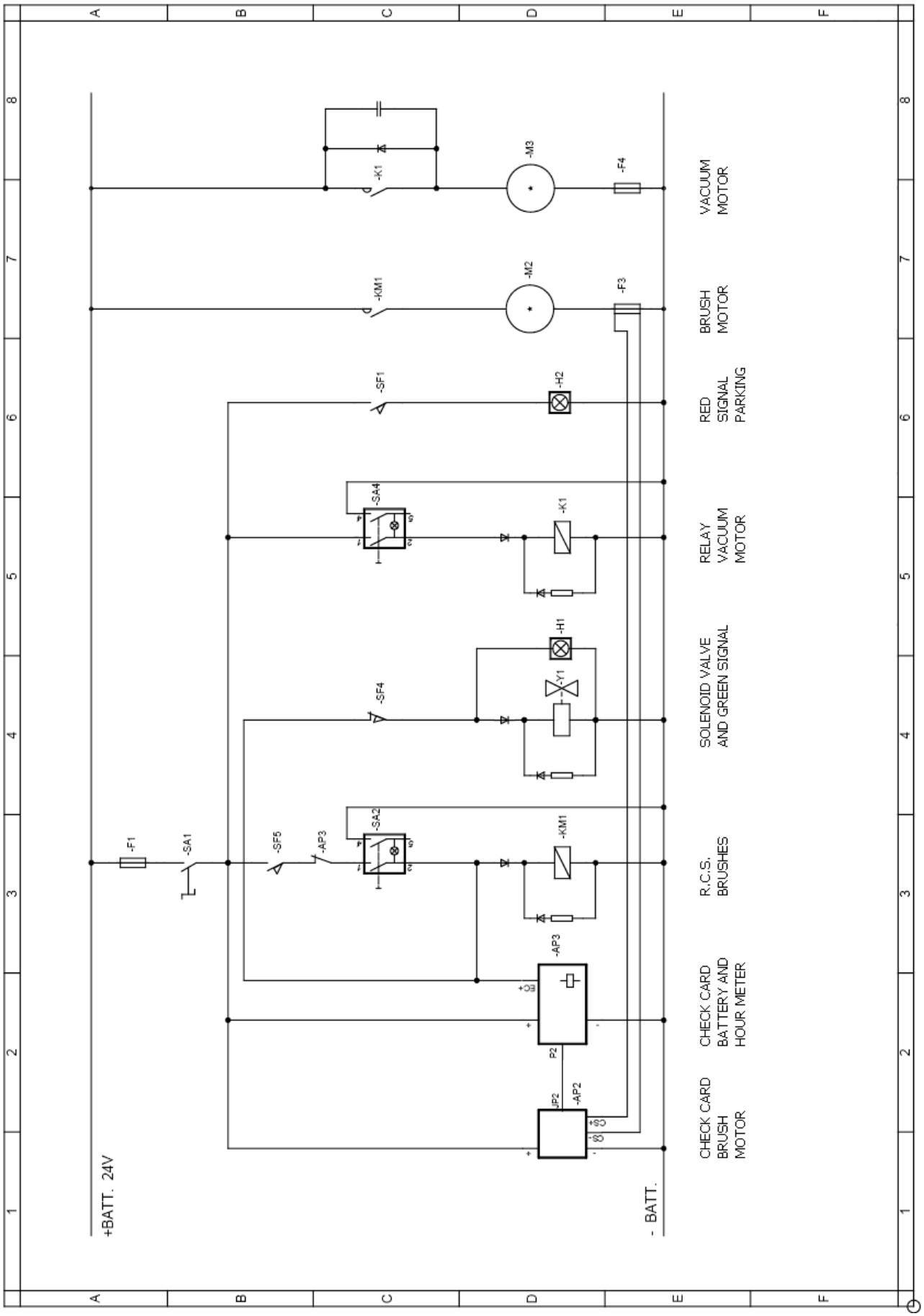
+BATT. 24V
- BATT.
-F1
-SA1
-SF5
-AP3
-SA2
-KM1
-SF4
-H1
-Y1
-SA4
-K1
-SF1
-H2
-KM1
-M2
-F3
-K1
-M3
-F4
-AP3
P2
JP2
-AP2
VACUUM MOTOR
BRUSH MOTOR
RED SIGNAL PARKING
RELAY VACUUM MOTOR
SOLENOID VALVE AND GREEN SIGNAL
R.C.S. BRUSHES
CHECK CARD BATTERY AND HOUR METER
CHECK CARD BRUSH MOTOR

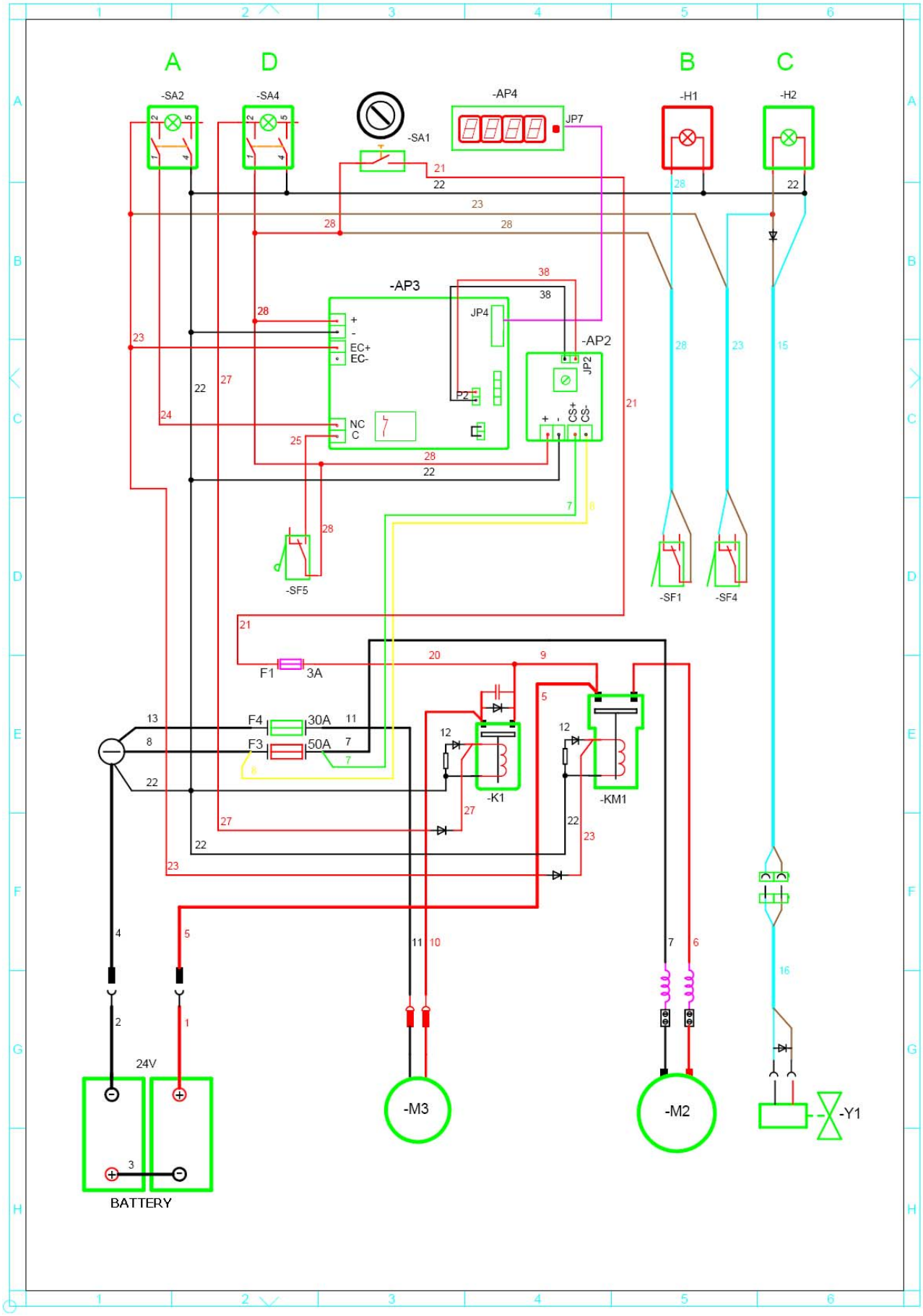
A
D
B
C
-SA2
-SA4
-SA1
-AP4
JP7
-H1
-H2
-AP3
JP4
EC+
EC-
NC
C
P2
-AP2
JP2
CS+
CS-
-SF5
-SF1
-SF4
F1
3A
F4
30A
F3
50A
-K1
-KM1
24V
BATTERY
-M3
-M2
-Y1

Wheel Assembly

Model :99695 BR 22/14

	Number	Description	Qty Req.
1	46523020	WHEEL FLANGED	2
2	60308007	WASHER, CONICAL S.S.	6
3	60110820	SCREW S.S.	6
4	60210810	NUT	2
5	47220020	SPRING, TRACTION	1
6	20208020	BRAKE PAD	2
7	20208010	BRAKE SHIFT	1
8	61301701	O-RING	1
9	47002040	SPACER	1
10	20208040	LEVER BRAKE SHAFT	1
11	60306010	WASHER	1
12	60506004	WASHER, LOCK	1
13	60110604	SCREW	1
14	62120601	CLIP, FORK	1
15	62110601	FORK LONG	1
16	62401001	CABLE, BRAKE	1
17	46200020	MOTOR ASSEMBLY, GEARED	1
18	63130001	CONNECTOR CONTACT	2
19	63110004	CONNECTOR, RED	2
20	63607141	MOTOR, CARBON BRUSH	2
21	46702010	AXLE SHAFT LONG	1
22	46702020	AXLE SHAFT SHORT	1

Wheel Assembly, Model:99695 BR 22/14

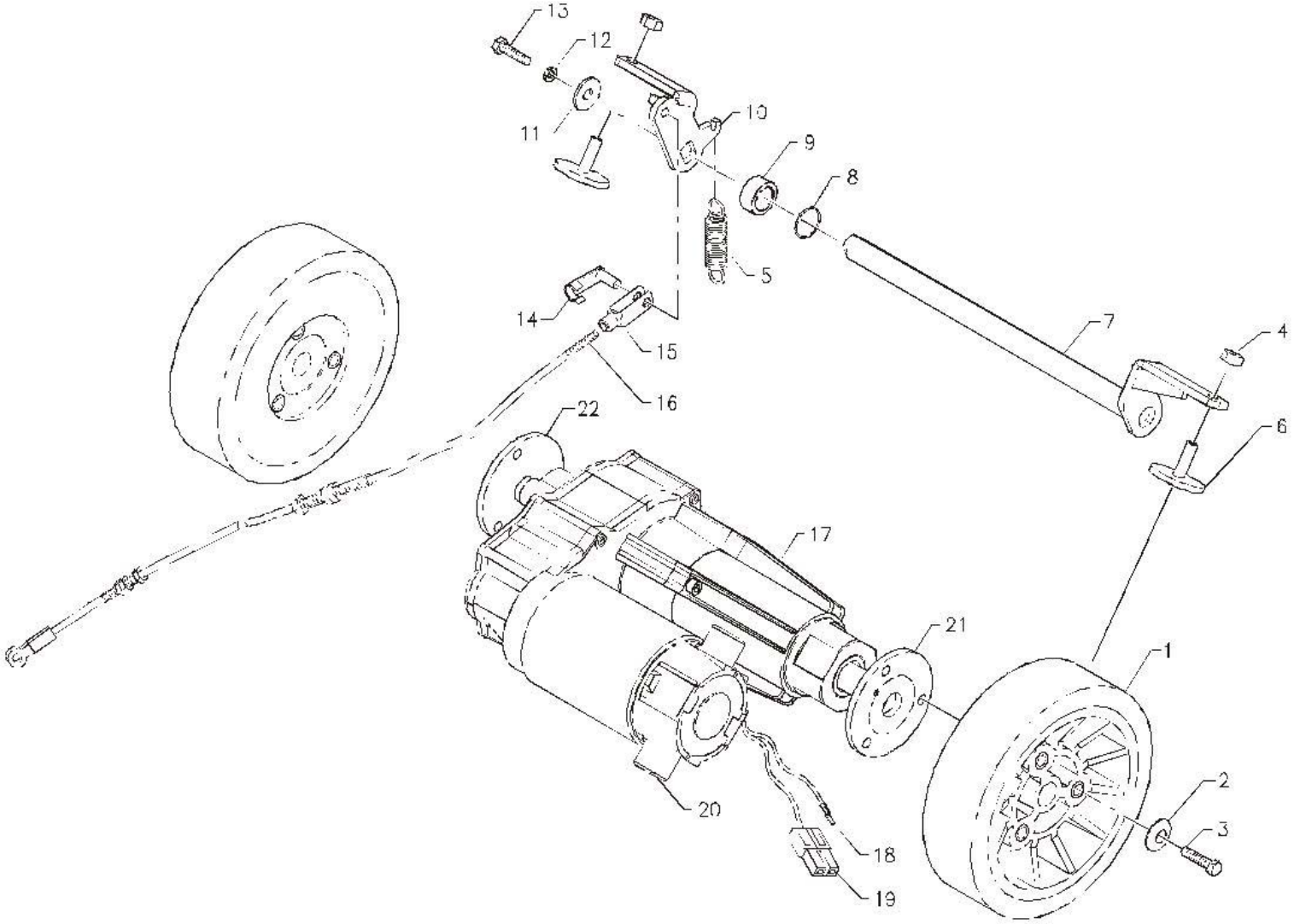

Lever Control Assembly

Model :99695 BR 22/14

	Number	Description	Qty Req.
1	20208060	LEVER, BLOCKING	1
2	20208050	LEVER, BRAKE	1
3	61810006	KNOB BRAKE CONTROL	1
4	60604002	PIN PARALLEL	1
5	60110807	SCREW	1
6	60110617	SCREW	2
7	47210090	SPRING, COMPRESSION	1
8	62401001	CABLE, BRAKE	1
9	60220601	NUT, LOCK	6
10	47220040	SPRING, TRACTION	1
11	60220301	NUT, LOCK	2
12	63409004	MICROSWITCH	1
13	47001060	SPACER	2
14	60140305	SCREW	2
15	20208030	SUPPORT, PLAQUE LEVERS	1
16	47101070	BUSHING	1
17	60100601	SCREW	1
18	20205020	LEVER SQUEEGEE CONTROL	1
19	60306007	WASHER	1
20	20105520	ROPE WITH EYE AND FORK	1
21	60110612	SCREW	1
22	61810005	KNOB SQUEEGEE CONTROL	1
23	60305005	WASHER	1
24	60190503	SCREW	1
25	60220801	NUT LOCK	1
26	60308004	WASHER	1
27	60120406	SCREW	1
28	60210402	NUT	2

Lever Control Assembly, Model:99695 BR 22/14

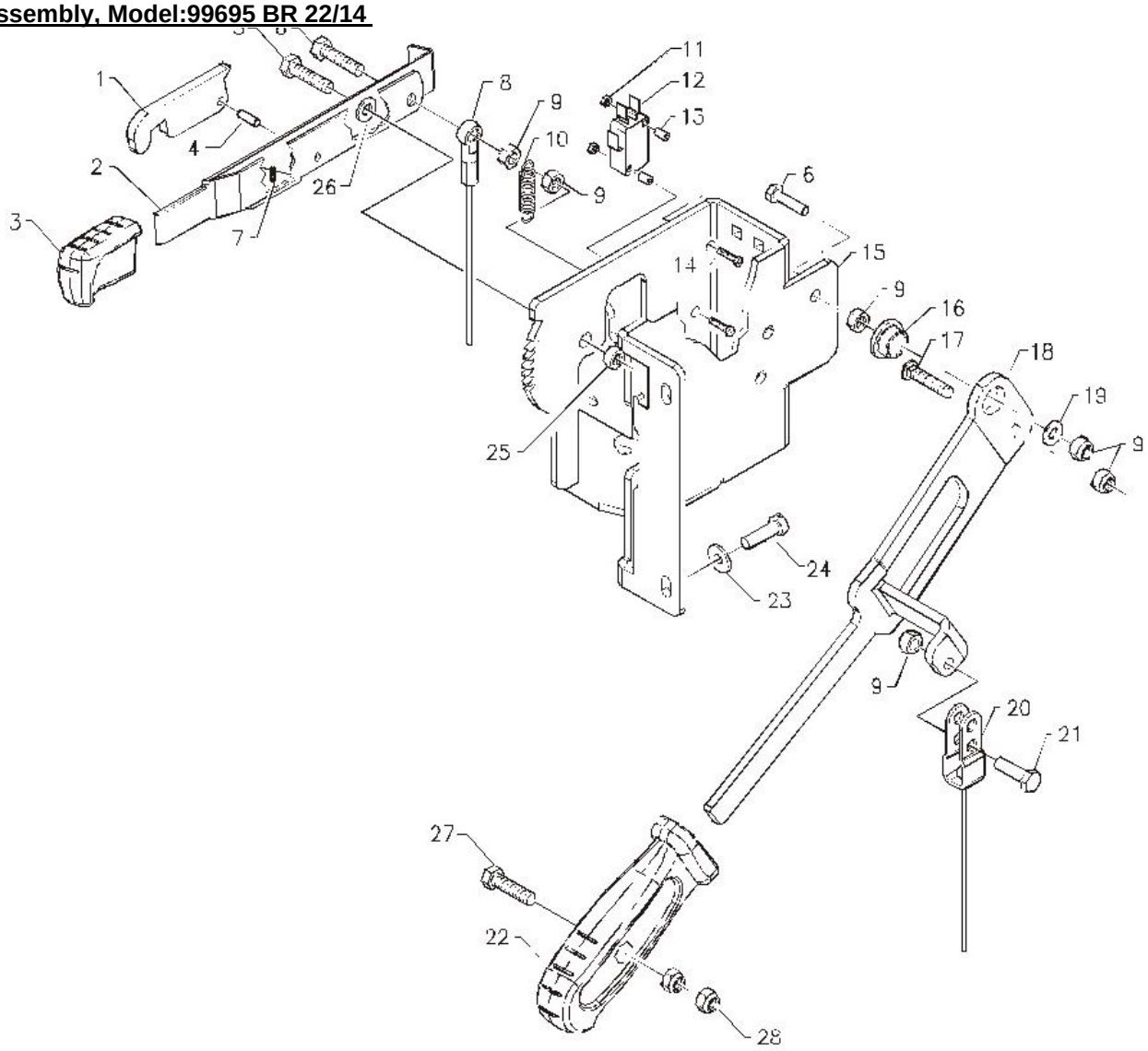

Squeegee Assembly

Model :99695 BR 22/14

	Number	Description	Qty Req.
1	60110822	SCREW S.S	2
2	60308010	WASHER S.S.	2
3	47101040	BUSHING	2
4	46541010	WHEEL, BUMPER GREY	2
5	48202040	SQUEEGEE BODY S.S.	1
6	60308003	WASHER	2
7	60220803	LOCK NUT	2
8	48402020	SQUEEGEE, FRONT RUBBER	1
9	48302020	BLADE INOX, FRONT RUBBER	1
10	61706004	WING NUT S.S.	5
11	62200001	HOOK	1
12	60210601	NUT S.S.	1
14	60110610	SCREW	1
15	60512005	LOCK WASHER	2
16	20104030	BOLT, LEFT STUD	1
17	20104020	BOLT, RIGHT STUD	1
18	48402010	SQUEEGEE RUBBER, REAR	1
19	48302010	BLADE, REAR RUBBER	1
20	47610010	HOSE, SQUEEGEE	1
21	V8202010	SQUEEGEE ASS'Y S.S	1
22	47230030	HOSE, GUIDE SPRING	1
23	20104010	ADJUSTER REAR BLADE	1
24	60170303	SCREW S.S.	1
25	60220302	LOCK NUT	1

Squeegee Assembly, Model:99695 BR 22/14

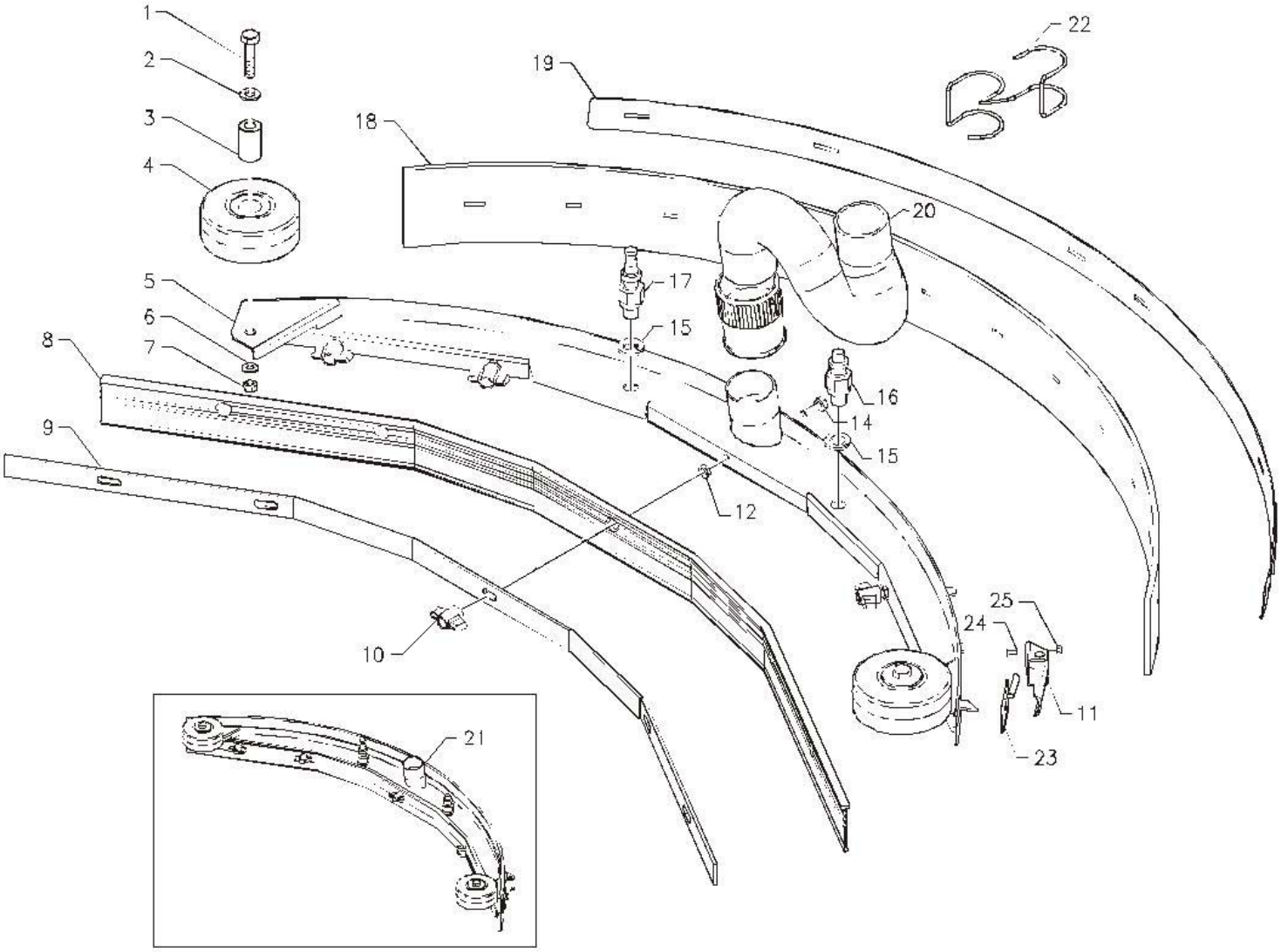

Squeegee Control Assembly

Model :99695 BR 22/14

	Number	Description	Qty Req.
1	60220801	NUT, LOCK	4
2	60308004	WASHER	1
3	47210020	SPRING, COMPRESSION S.S.	1
4	20105060	PIN, COUPLER	1
5	20105050	COUPLER, SQUEEGEE	1
6	60510001	WASHER, LOCK	2
7	61706001	HANDWHEEL	1
8	60210607	NUT	2
9	20105070	ADJUSTER, INCLINATION	1
10	60513001	WASHER	1
11	47210030	SPRING, COMPRESSION S.S.	1
12	47101060	BUSHING	1
13	60516001	WASHER, LOCK	1
14	20105040	WHEEL ADJUSTER	2
15	20105030	SUPPORT, WHEEL	2
16	60110622	SCREW	2
17	60220601	NUT, LOCK	2
18	60306007	WASHER	3
19	46511010	WHEEL AND BUSHING	2
20	60220502	NUT, LOCK	1
21	60110505	SCREW	1
22	20105020	SUPPORT, SQUEEGEE	1
23	61708002	NUT, WING	1
24	60309002	WASHER	4
25	60508001	WASHER LOCK	3
26	60110807	SCREW	2
27	60110823	SCREW	2
28	20105080	WEIGHT, DRILLED	1
29	65001007	LABEL HEIGHT ADJUSTMENT	1
30	60210805	NUT	2
31	61708001	HANDWHEEL	2
32	47210010	SPRING, COMPRESSION S.S.	2
33	20205010	SQUEEGEE ARM	1
34	47807020	SHEATH	2
37	20105050	COUPLER, SQUEEGEE	1
38	47102010	BUSHING	2
39	20205030	SQUEEGEE ARM, SHAFT	1
40	V0105001	INCLINATION ADJUSTMENT ASSY	1
41	47002050	SPACER	1
42	60110809	SCREW	1
43	47220050	SPRING TRACTION	1
44	20205040	SQUEEGEE PRESSURE, TIE ROD	1
45	60210601	NUT S.S.	1
46	61706003	NUT, WING	1

Squeegee Control Assembly, Model:99695 BR 22/14

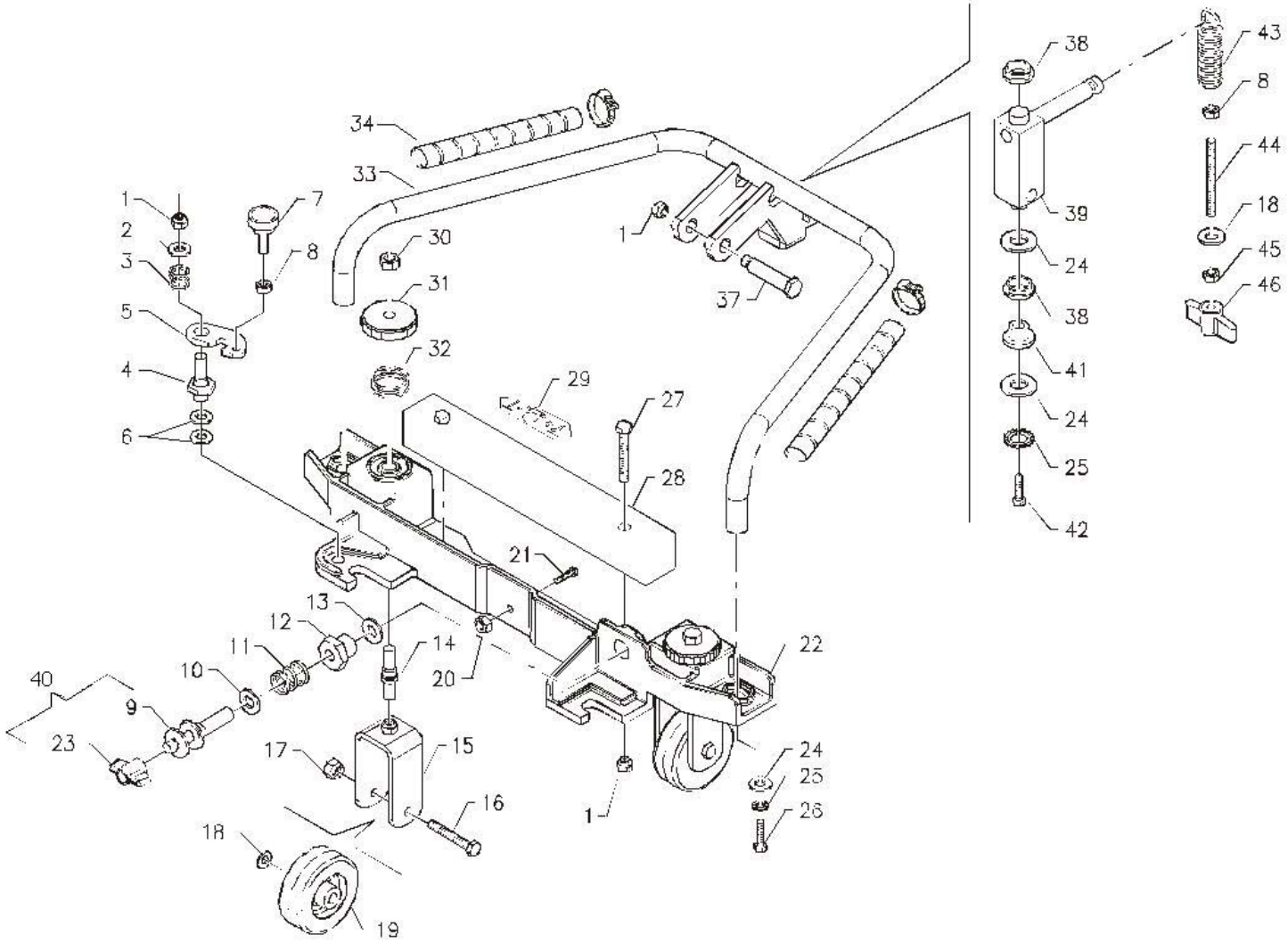

Tank and Vacuum Assembly

Model :99695 BR 22/14

	Number	Description	Qty Req.
1	47610050	HOSE, VACUUM	1
2	20110040	CAP, FILTER	1
3	47800010	CAP, GASKET FILTER	1
4	20110060	ROD WITH PLATE	1
5	20110070	FLOAT	1
6	47900010	FLOAT, FILTER	1
7	20110050	PROTECTION, FILTER	1
8	20210030	PLAQUE FOR PROP	2
9	60306007	WASHER	2
10	60506002	WASHER, LOCK	3
11	60110604	SCREW	2
12	20210020	TANK, PROP RECOVERY	1
13	20210040	COUPLER FOR PROP	1
14	61820002	LEVER, BLOCKING	2
15	47210080	SPRING, COMPRESSION S.S.	2
16	60110618	SCREW S.S.	1
17	47302020	TANK, RECOVERY	1
18	47302010	TANK, SOLUTION	1
19	62350001	CAP, SOLUTION TANK	1
20	20210060	SUPPORT VACUUM MOTOR	1
21	60305005	WASHER	1
22	60190424	SCREW	2
23	20210090	PIN, RECOVERY TANK	2
24	62040001	NUT COVER BLACK	2
25	60220601	NUT LOCK	1
26	60210607	NUT	1
27	20110220	BOLT, STUD	1
28	20110080	PROTECTION RING, INNER	1
29	48103020	VIBRATION-DAMPIGN	1
30	63608112	CARBON BRUSH MOTOR BLACK	2
31	63130001	CONTACT CONNECTOR	2
32	63110004	CONNECTOR, RED	2
33	49320060	VACUUM MOTOR AND CONNECTOR	1
35	47804010	GASKET, MOTOR VACUUM	1
36	20210050	BASE, VACUUM MOTOR	1
37	60110635	SCREW	2
38	60230601	NUT, CAP	1
39	61930005	WRENCH, CLAMP HOSE	1
40	20110210	BLOCKING, PLAQUE MOTOR	1
41	61910002	CLAMP	1
42	63714002	SUPPORT, EYE	2
43	63714001	SUPPORT, SADDLE	1
44	48103010	SEPARATOR VACUUM MOTOR	1
45	20210080	TANK, CABLE RECOVERY	1
46	20310090	VACUUM MOTOR CASING	1
47	V0210004	FILTER AND FLOAT ASSEMBLY	1
48	V0110007	FILTER AND FLOAT ASSEMBLY	1

Tank and Vacuum Assembly, Model:99695 BR 22/14

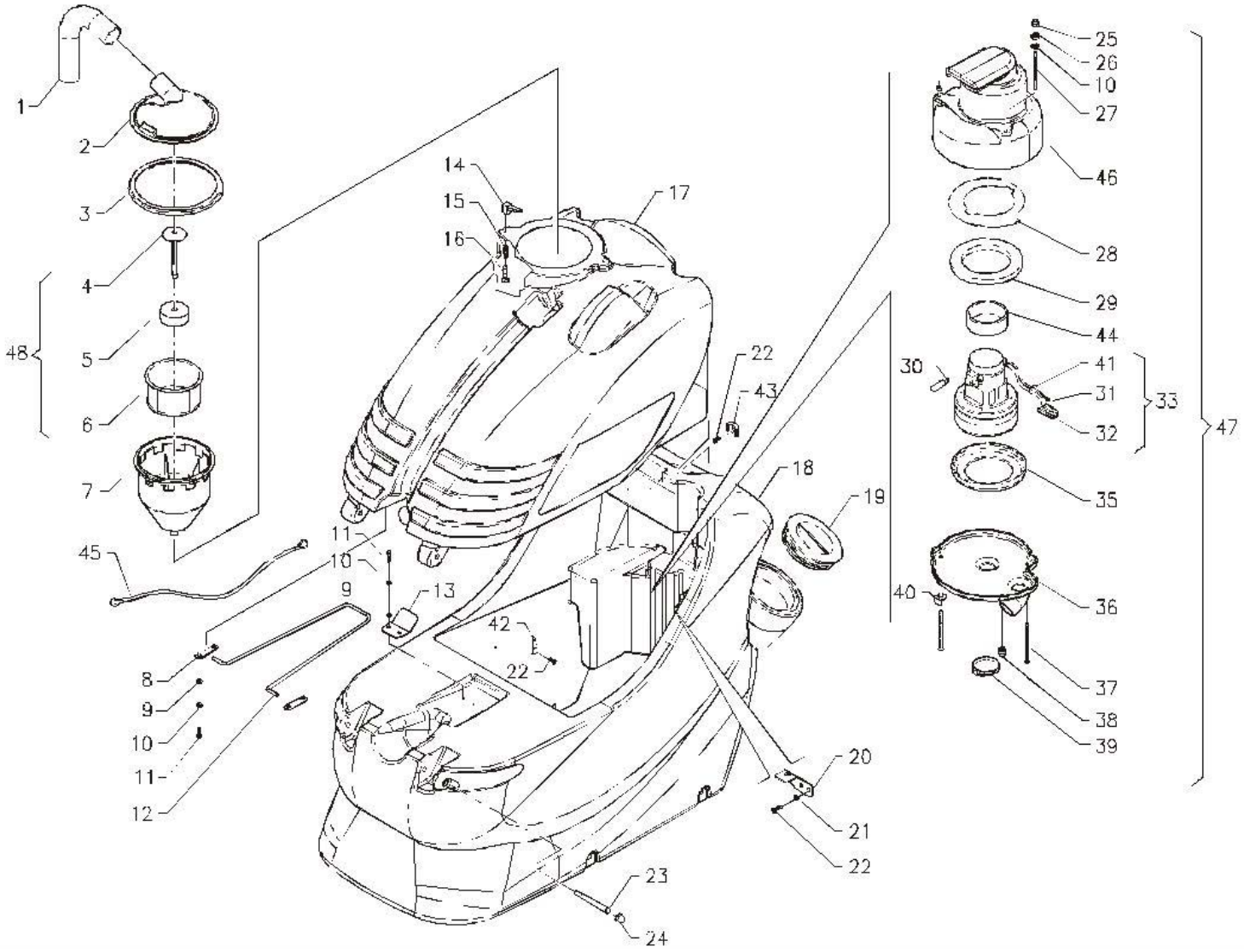

Handle Bar and Electrical Layout Assembly

Model :99695 BR 22/14

	Number	Description	Qty Req.
1	62800002	MAXIFUSEHOLDER 1-WAY	2
2	60160503	DOWEL	1
3	63706001	INSULATOR	1
4	60505001	WASHER, LOCK	1
5	20112030	PANEL ELECTRICAL INSTALLATION	1
6	63717002	FIXING PLAQUE	1
7	60110501	SCREW	1
8	63705001	COUPLER, DOUBLE	2
9	60140502	SCREW	3
10	49201010	HANDLEBAR BODY	1
12	60110624	SCREW	2
13	61810001	KNOB	2
14	20109020	KNOB, PROTECTION	2
15	60140301	SCREW	2
16	60503002	WASHER, LOCK	2
17	20113010	LEVER DRIVE CONTROL	2
18	20109010	TUBE, HANDLEBAR	1
19	60110619	SCREW	2
20	20113040	CAMSHAFT	1
21	61140001	STOP RING	2
22	20113030	SUPPORT DRIVE CONTROL	1
23	60140305	SCREW	1
24	47230020	SPRING DRIVE CONTROL	1
25	63409001	MICROSWITCH	1
26	47101080	BUSHING	2
27	20113060	LEVER	1
28	20113100	MICRO CAM DRIVE CONTROL	1
29	60140304	SCREW	1
30	47101120	BUSHING	1
31	60210302	NUT BRASS	3
32	20113050	LEVER SPRING SIDE	1
33	61140002	RING, SELFLOCKING	1
34	20113090	SPRING STOP	1
36	63707001	DISPLAY BATTERY CONTROL	1
37	60220301	NUT, LOCK	3
39	49201020	HANDLEBAR COVER	1
40	49801014	DISPLAY CABLE	1
41	63302003	SIGNAL LAMP RED PROTECTED	1
42	60170301	SCREW S.S.	1
43	65001008	DECAL INSTRUMENT BOARD	1
44	63403001	BIP, SWITCH GREEN PROTECTED	2
45	63302001	SIGNAL LAMP GREEN PROTECTED	1
46	49703020	BATTERIES, CHECK CARD	1
47	60140401	SCREW	1
48	60504001	WASHER, LOCK	1
49	49620100	REMOTE CONTROL SWITCH	1
50	60303002	WASHER	1
51	49620010	RELAY	1
52	60305001	WASHER	1
53	62800001	FUSEHOLDER 1-WAY	1
54	60220502	NUT, LOCK	1
55	47101090	BUSHING	1
56	60220603	NUT, LOCK	2
58	49703010	CEHCK CARD C ONTROL BATTERIES	1
59	63499003	KEY	1
60	63410001	SWITH WITH KEYS	1
61	63499002	FLANGE FOR SWITCH	1
62	63413001	CONTACT FOR SWITCH	1
63	60230601	NUT, CAP	2
64	60190408	SCREW	1
65	62800301	FUSE	1
66	62803001	MAXIFUSE	1

Handle Bar and Electrical Layout Assembly

Model :99695 BR 22/14

	Number	Description	Qty Req.
67	62805001	MAXIFUSE	1
68	60306003	WASHER	2
69	60210607	NUT	2
70	49704002	CHECK CARD CONTROL MOTORS	1
71	63303001	COVER	1

Handle Bar and Electrical Layout Assembly, Model:99695 BR 22/14

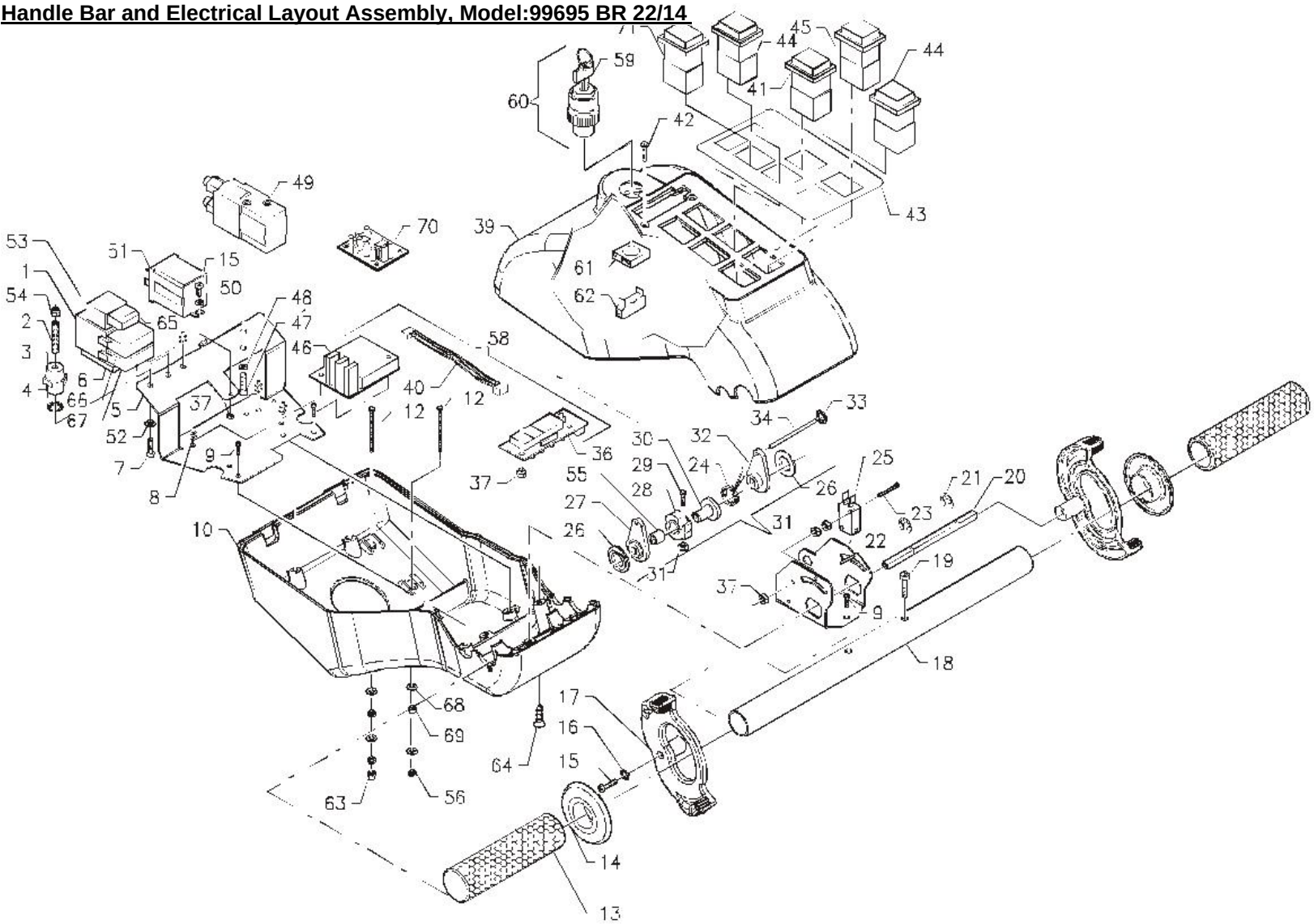

Water Unit Assembly

Model :99695 BR 22/14

	Number	Description	Qty Req.
1	61820003	LEVER EXHAUST PLUG	1
2	60604004	PIN, PARALLEL S.S.	1
3	20110170	PLUG, TIE ROD EXHAUST	1
4	20110130	PLUG, COVER EXHAUST	1
5	20110150	PLUG, RUBBER EXHAUST	1
6	20110140	PLUG, BOTTOM EXHAUST	1
7	60220604	NUT, LOCK	2
8	61930001	CLAMP HOSE WRENCH S.S.	1
9	47610040	HOSE, EXHAUST	1
10	60180608	SCREW	1
11	47230040	COUPLER, SPRING MUFF	1
12	60306002	WASHER, VIBRATION-DAMPING	1
13	47532020	SOLENOID VALVE 24V DC	1
14	47592010	CONNECTOR	1
15	V0110008	EXHAUST PLUG ASSEMBLY	1
16	60190315	SCREW	1
17	20106080	SOLENOID VALVE SUPPORT	1
26	62340070	NUT, RING	1
27	47630050	HOSE	1
28	62340060	FITTING, BENT	1
30	47900030	CARTRIDGE, FILTER	1
31	47900040	GASKET FILTER	1
33	60800002	CLIP S.S.	1
34	20210010	VALVE CONTROL, ROD SOLUTION	1
35	60305005	WASHER	1
36	20110110	LEVER, SOLUTION VALVE	1
37	62310001	BODY, SOLUTION VALVE	1
38	62360010	NIPPLE, REDUCED	1
39	47900020	FILTER	1
40	60508003	WASHER, LOCK	2
41	60100607	SCREW	2
42	62340030	FITTING, BENT	1
43	47630040	HOSE	1
44	61930002	WRENCH, CLAMP HOSE	1
45	63409002	MICROSWITCH	1
46	60190303	SCREW	2
47	61810004	KNOB, CYLINDRICAL	1
48	60210601	NUT, S.S.	1
49	47210050	SPRING, COMPRESSION S.S.	1
50	20110190	ROD, GUIDE SOLUTION VALVE	1
51	60306010	WASHER	1
52	47001060	SPACER	2
53	47522010	COIL SOLENOID VALVE	1
54	47512040	SOLENOID VALVE BODY	1

Water Unit Assembly, Model:99695 BR 22/14

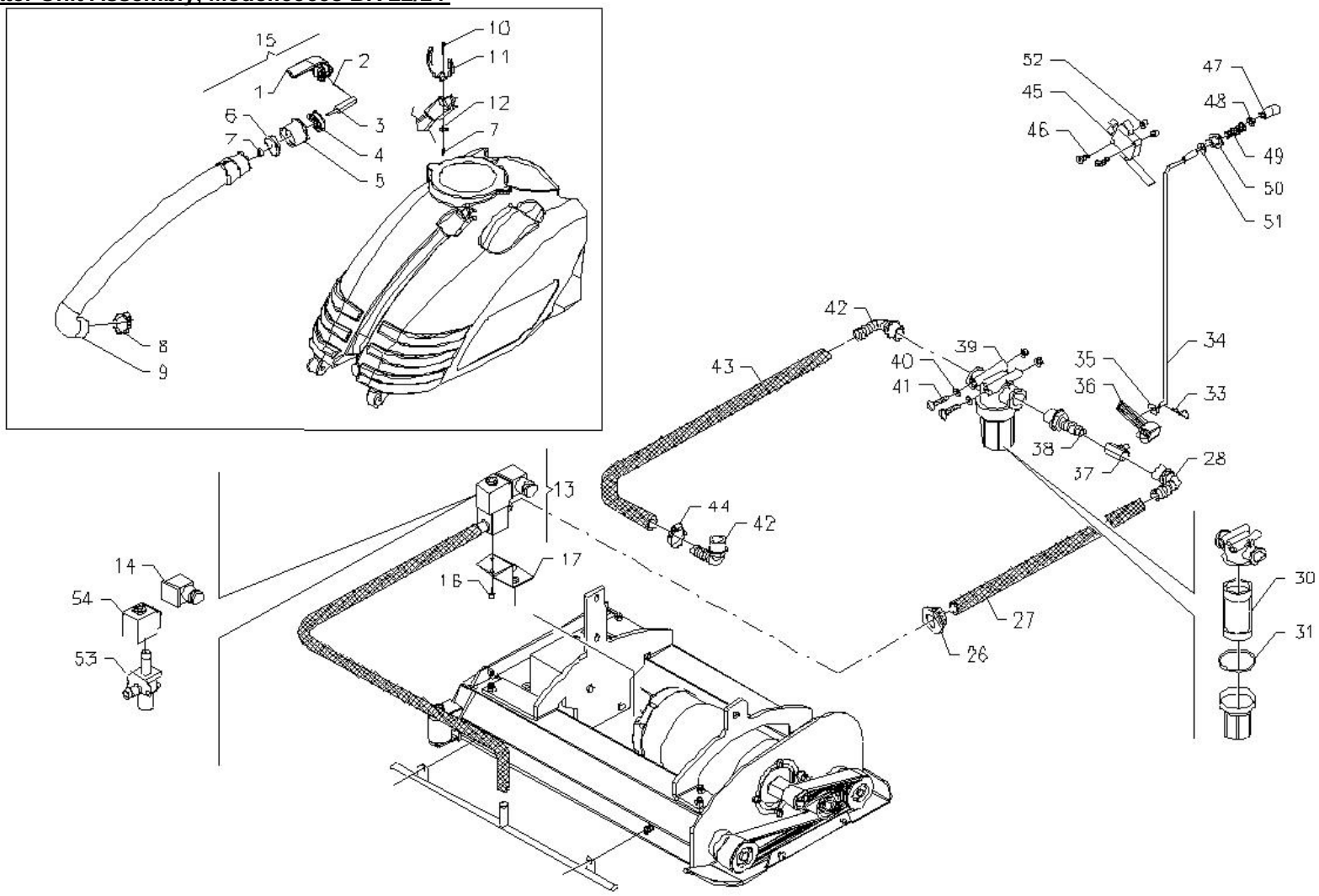

Brush Base Assembly

Model :99695 BR 22/14

	Number	Description	Qty Req.
1	20106110	COUNTER WEIGHT	1
2	20206060	BASE COUPLING RIGHT	1
3	60220604	NUT, LOCK	3
4	60180606	SCREW	2
5	60110608	SCREW	2
6	47532020	SOLENOID VALVE 24V DC	1
7	20106080	SOLENOID VALVE SUPPORT	1
8	60190315	SCREW	1
9	20206020	SUPPORT	1
10	61706005	WING, NUT	2
11	60306007	WASHER	3
12	60110830	SCREW	1
13	47101130	BUSHING	1
14	46541020	BUMPER WHEEL	1
15	48902100	CYLINDRICAL BRUSH	2
16	60110504	SCREW	2
17	20206030	DISTRIBUTOR	1
18	20206010	TUNNEL	1
19	60100811	SCREW	1
20	46220070	MOTOR 24V	1
21	60905051	KEY	2
22	46920170	MOTOR PULLEY	1
23	60306007	WASHER	1
24	60506004	WASHER, LOCK	2
25	60110617	SCREW	1
26	20206050	BASE COUPLING LEFT	1
27	60110606	SCREW	3
28	48602100	GUARD, REAR TUNNEL SPLASH	1
29	20206040	BLADE SPLASH GUARD	1
30	60220602	NUT, LOCK	3
31	20206080	BASE, BRUSH COVER	1
32	20106040	PIN	1
33	47001090	SPACER	2
34	46930050	PULLEY	1
35	60309002	WASHER	1
36	20206090	BRUSCH STOP	1
37	20206070	PIN	1
38	47001080	SPACER	1
39	61113201	SEEGER RING	1
40	61411502	BEARING	2
41	46920180	PULLEY	1
42	60306010	WASHER	1
43	60110608	SCREW	1
44	61610013	BELT	1
45	60110502	SCREW	2
46	60505001	WASHER, LOCK	2
47	60305005	WASHER	2
48	60305005	WASHER	2
49	60180502	SCREW	2
50	60110612	SCREW	1
51	61411705	BEARING	2
52	47592010	CONNECTOR	1
53	47522010	COIL SOLENOID VALVE	1
54	47512040	SOLENOID VALVE BODY	1
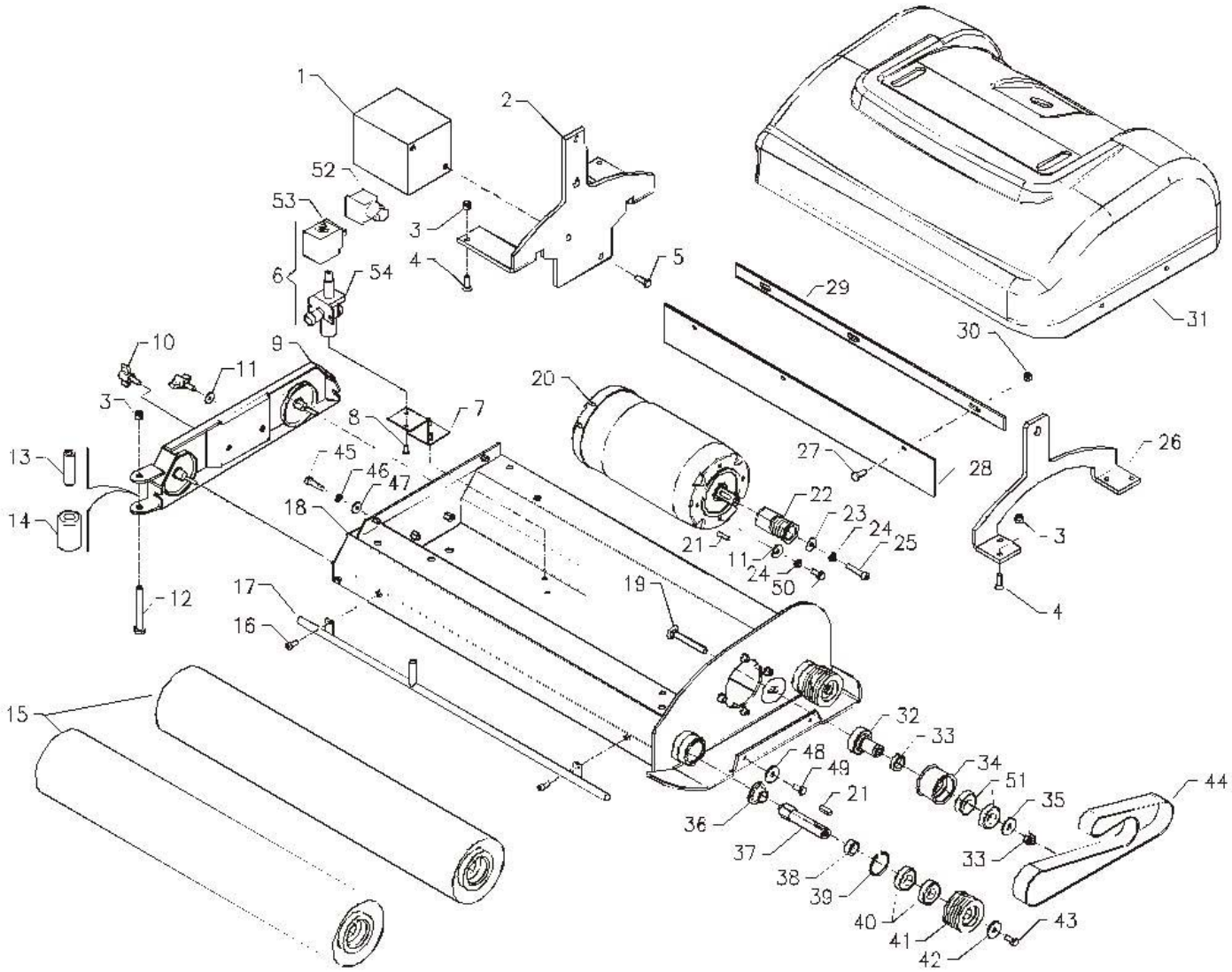
Brush Base Assembly, Model:99695 BR 22/14